Automatic Washers

Refer to Page 3 for Model Numbers

Parts

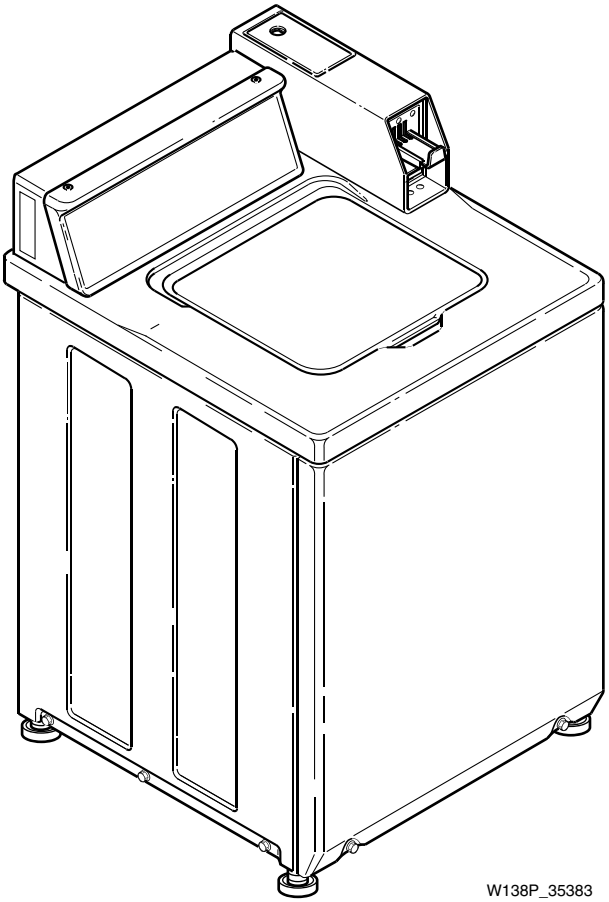

Alliance Laundry Systems

www.comlaundry.com

Part No. 35383R6
March 2011

Table of Contents

Title	Page
Parts Ordering Information	2
Nameplate Location	2
Model Identification	3
Timer, Case and Plate	4
Timer, Meter Case and Service Door (Drawing 1 of 2)	6
Timer, Meter Case and Service Door (Drawing 2 of 2)	8
552P3 Coin Slide Start Security Kit	10
Coin Drop, Meter Case and Service Door	12
Control Panel, Control Hood and Controls (Drawing 1 of 4)	14
Control Panel, Control Hood and Controls (Drawing 2 of 4)	16
Control Panel, Control Hood and Controls (Drawing 3 of 4)	18
Control Panel, Control Hood and Controls (Drawing 4 of 4)	20
Cabinet Top and Loading Door	22
Out-of-Balance Switch	24
Motor, Mounting Bracket, Belts and Idler Assembly	26
Inlet Hose, Fill Hose and Mixing Valve and Mounting Bracket	28
Agitator, Drive Bell, Seal Kit, Washtub and Hub	30
Outer Tub, Cover and Pressure Hose	32
Pump Assembly, Bracket, Hoses and Siphon Break Kit	34
Bearing Housing, Brake, Pulley and Pivot Dome	36
Transmission Assembly and Balance Ring	38
Transmission Assembly	40
Front Panel, Base Assembly and Cabinet Assembly	42
Mixing Valve and Motor Disconnect Blocks, Terminals and Terminal Extractor Tool	44
Power Cord and Terminals	46
Special Tools (Drawing 1 of 2)	48
Special Tools (Drawing 2 of 2)	50
Wire Harnesses and Wires	52
Parts Index	53

© Copyright 2011, Alliance Laundry Systems LLC

All rights reserved. No part of the contents of this book may be reproduced or transmitted in any form or by any means without the expressed written consent of the publisher.

Parts Ordering Information

If literature or replacement parts are required, contact the source from whom the machine was purchased or contact Alliance Laundry Systems at (920) 748-3950 for the name and address of the nearest authorized parts distributor.

For technical assistance, call either of the numbers listed below:

(920) 748-3121 Ripon, Wisconsin

+32 56 41 20 54 Wevelgem, Belgium

Nameplate Location

When calling or writing about your product, be sure to mention model and serial numbers. Model and serial numbers are located on nameplate(s) as shown.

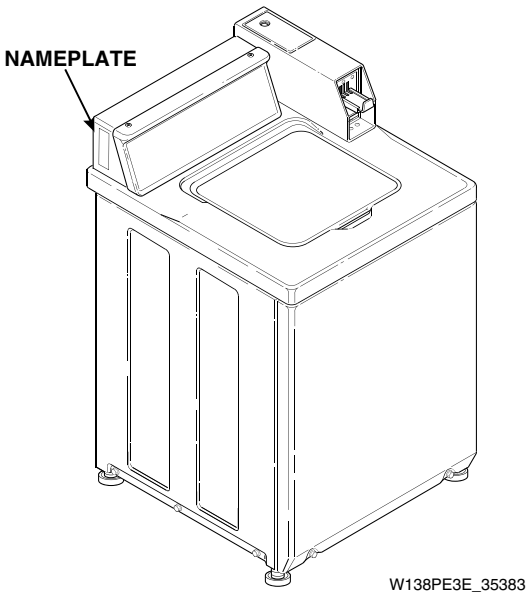

© Copyright, Alliance Laundry Systems LLC – DO NOT COPY or TRANSMIT

Model Identification

Information in this manual is applicable to these washer models:

EA2011*	EA2120*	EA2311*	EA2621*	EA2920*
EA2020*	EA2121*	EA2520*	EA2710*	EA2921*
EA2021*	EA2210*	EA2521*	EA2721*	JA0110*T
EA2110*	EA2220*	EA2610*	EA2820*	
EA2111*	EA2221*	EA2620*	EA2821*	

*** Add Letter To Designate Color. L - Almond W - White**

© Copyright, Alliance Laundry Systems LLC – DO NOT COPY or TRANSMIT

Timer, Case and Plate

Models EA2011*, EA2020* and EA2021*

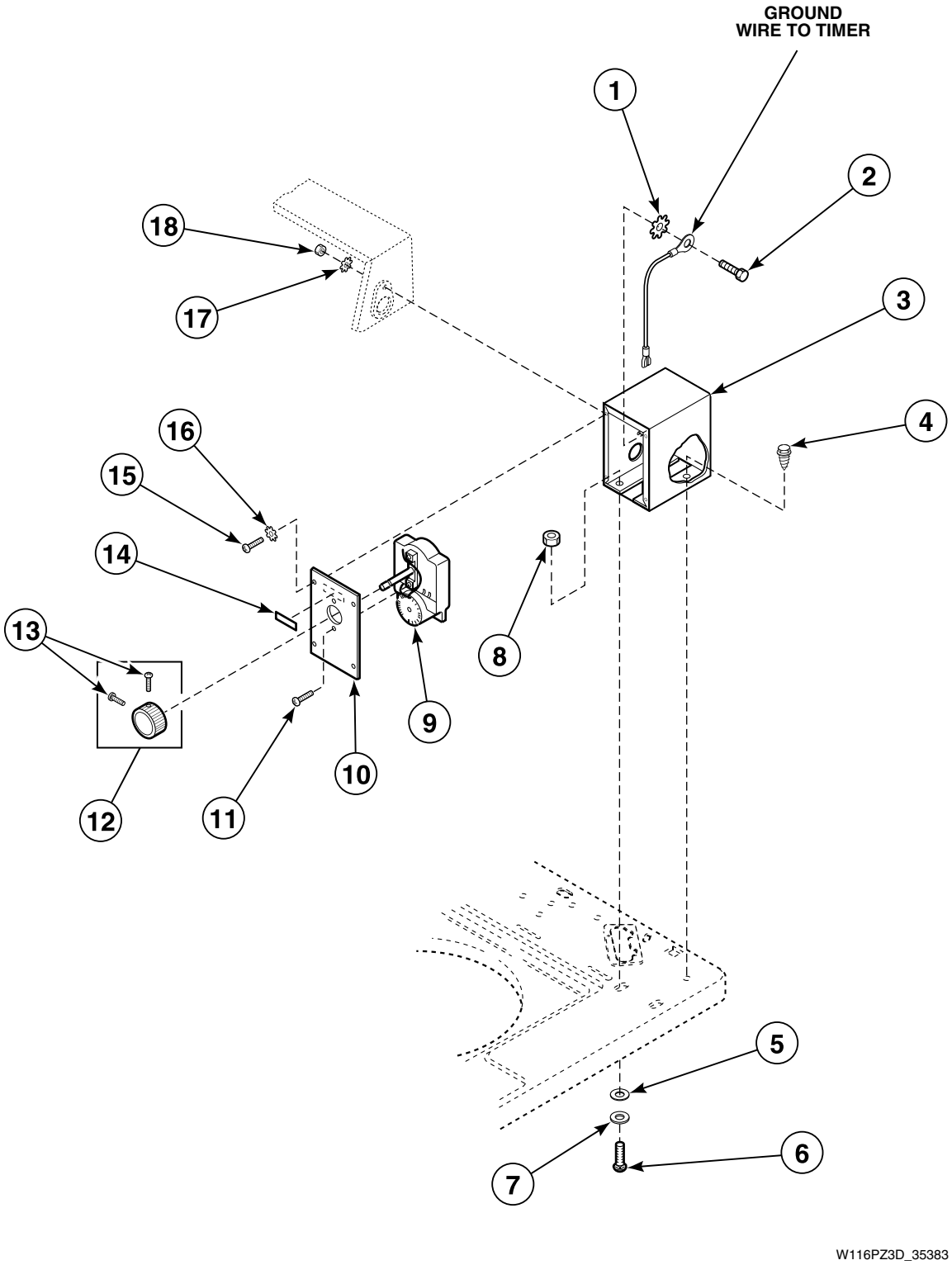

© Copyright, Alliance Laundry Systems LLC – DO NOT COPY or TRANSMIT

Timer, Case and Plate

REF	PART NO.	DESCRIPTION	COMMENTS
1	M400017	Washer	
2	02916	Screw	
3	37733W	Timer Case Assembly	
4	23962	Screw	
5	23225	Washer	Vinyl
6	02505	Bolt	
7	30627	Washer	
8	29786	Nut	
9	28716P	Timer	
10	31864W	Timer Plate	
11	27328	Screw	
12	26256	Timer Knob Assembly	
13	80399	Screw	
14	53738	Push-to-Start Sticker	
15	51778	Screw	
16	21734	Washer	
17	02431	Washer	
18	52566	Nut	

*** Add Letter To Designate Color. L - Almond W - White**

© Copyright, Alliance Laundry Systems LLC – DO NOT COPY or TRANSMIT

Timer, Meter Case and Service Door (Drawing 1 of 2)

Models EA2110*, EA2111*, EA2120*, EA2121*, EA2210*, EA2220*, EA2221*, EA2311*, EA2520*, EA2521* and JA0110*T

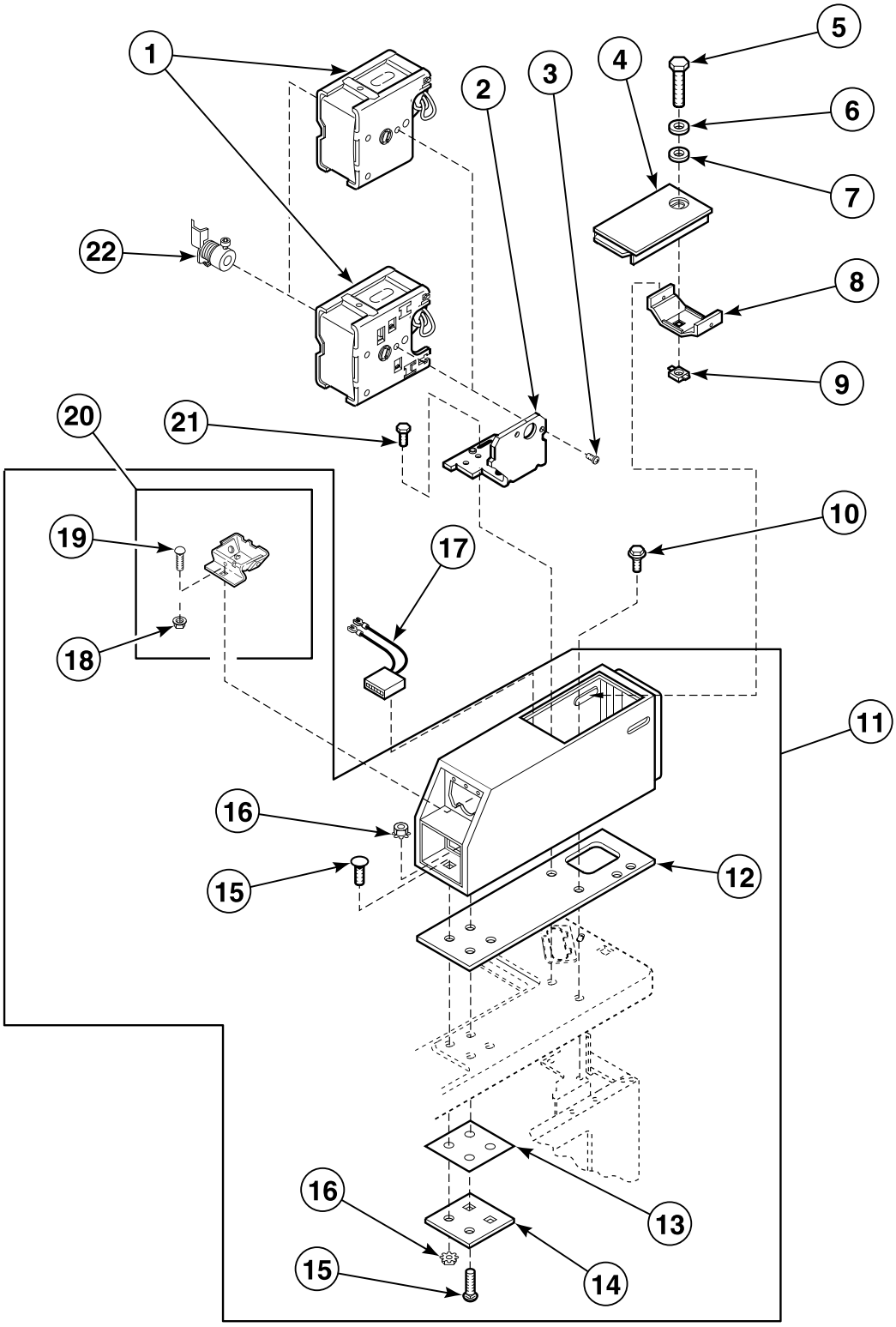

© Copyright, Alliance Laundry Systems LLC – DO NOT COPY or TRANSMIT

Timer, Meter Case and Service Door (Drawing 1 of 2)

REF	PART NO.	DESCRIPTION	COMMENTS
1	31111P	Timer	Models EA2110*, EA2111*, EA2120*, EA2121* and JA0110*T
	34601P	Timer	Models EA2210*, EA2220* and EA2221*
	34602P	Timer	Models EA2520* and EA2521*
2	35249	Timer Bracket	
3	21720	Screw	
4	35798WP	Service Door Assembly	White
	35798LP	Service Door Assembly	Almond
5	503673	Screw	
6	35917	Washer	Metal
7	35774	Washer	Vinyl
8	30642	Meter Case Locking Bracket	
9	30647	Nut	
10	502431	Screw	
11	524P3W	Meter Case and Funnel Kit	White; Includes items 12-16 and 20
	524P3L	Meter Case and Funnel Kit	Almond; Includes items 12-16 and 20
12	26354	Meter Case Gasket	
13	35526	Meter Case Bracket Gasket	
14	35525	Meter Case Lockdown Bracket	
15	02505	Bolt	
16	29786	Nut	
17	62113P	Counter Kit	Models EA2520* and EA2521*
18	29796	Nut	
19	29651	Bolt	
20	523P3	Coin Funnel Kit	Includes items 18 and 19
21	36048	Screw	
22	29503	Clutch Assembly	

*** Add Letter To Designate Color. L - Almond W - White**

© Copyright, Alliance Laundry Systems LLC – DO NOT COPY or TRANSMIT

Timer, Meter Case and Service Door (Drawing 2 of 2)

Models EA2610*, EA2620*, EA2621*, EA2710* and EA2721*

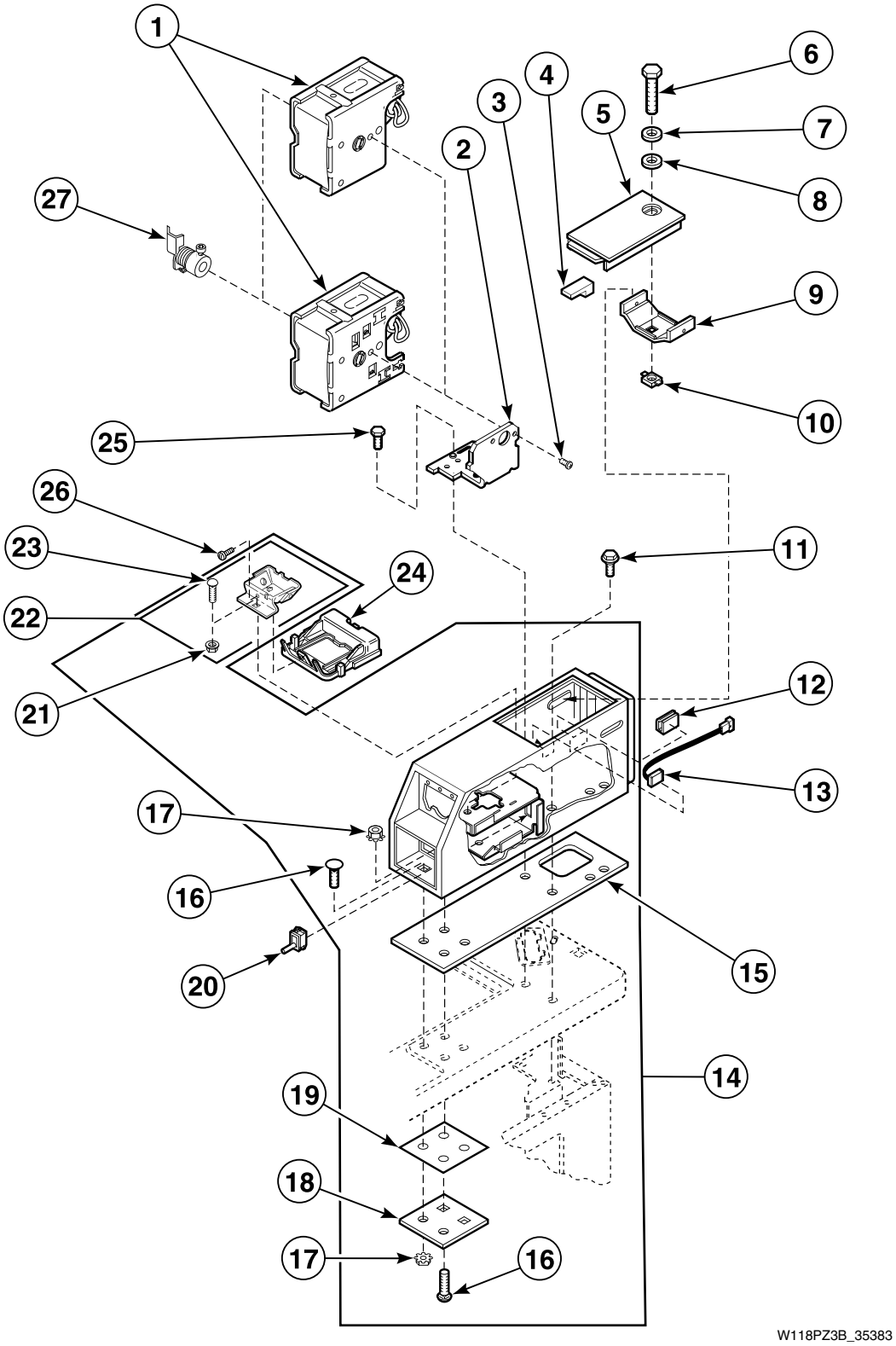

© Copyright, Alliance Laundry Systems LLC – DO NOT COPY or TRANSMIT

Timer, Meter Case and Service Door (Drawing 2 of 2)

REF	PART NO.	DESCRIPTION	COMMENTS
1	34602P	Timer	Models EA2610*, EA2620* and EA2621*
	N/A	Timer Assembly	Models EA2710* and EA2721*
2	35249	Timer Bracket	
3	21720	Screw	
4	501453	Magnet	
5	35798WP	Service Door Assembly	White
	35798LP	Service Door Assembly	Almond
6	503673	Screw	
7	35917	Washer	Metal
8	35774	Washer	Vinyl
9	30642	Meter Case Locking Bracket	
10	30647	Nut	
11	502431	Screw	
12	N/A	Wire Harness Clip	
13	34599	Reed Switch	
14	524P3W	Meter Case and Funnel Kit	White; Includes items 15-19 and 22
	524P3L	Meter Case and Funnel Kit	Almond; Includes items 15-19 and 22
15	26354	Meter Case Gasket	
16	02505	Bolt	
17	29786	Nut	
18	35525	Meter Case Lockdown Bracket	
19	35526	Meter Case Bracket Gasket	
20	34536	Pushbutton Switch	
21	29796	Nut	
22	523P3	Coin Funnel Kit	Includes items 21 and 23
23	29651	Bolt	
24	N/A	Sensor Control	
25	36048	Screw	
26	31260	Screw	
27	29503	Clutch Assembly	

*** Add Letter To Designate Color. L - Almond W - White**

N/A = Part no longer available

© Copyright, Alliance Laundry Systems LLC – DO NOT COPY or TRANSMIT

552P3 Coin Slide Start Security Kit

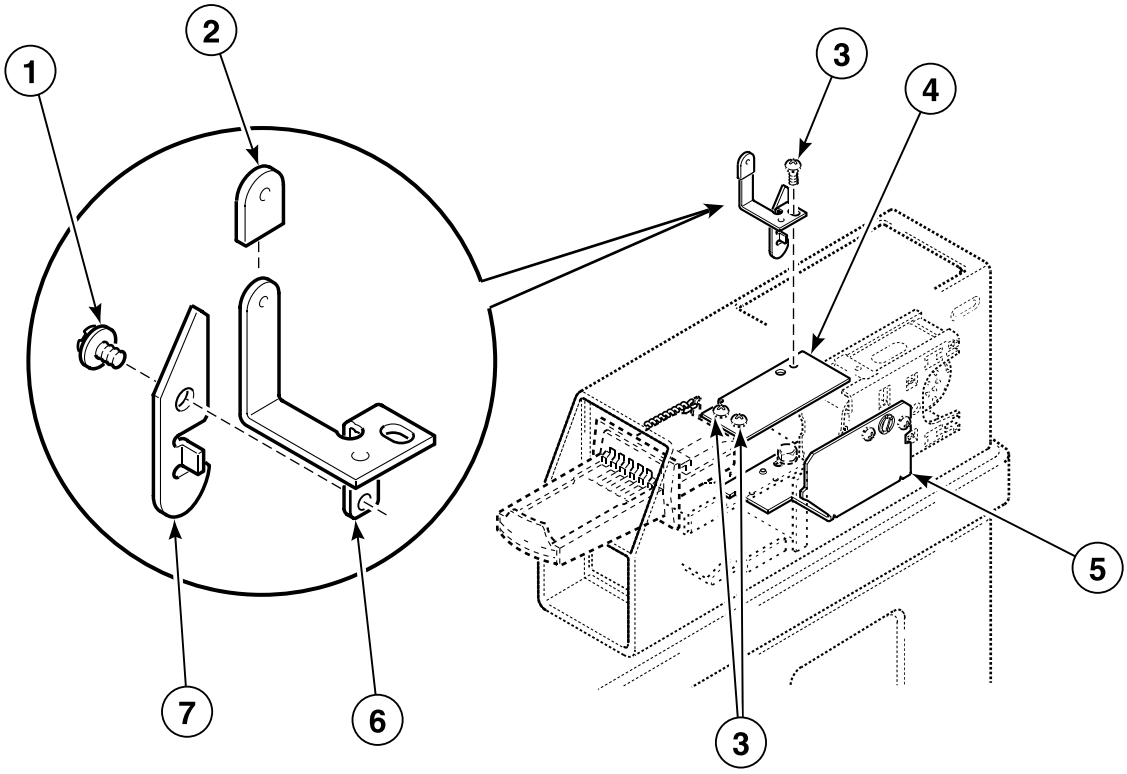

W026K_35383

© Copyright, Alliance Laundry Systems LLC – DO NOT COPY or TRANSMIT

552P3 Coin Slide Start Security Kit

REF	PART NO.	DESCRIPTION	COMMENTS
1	36166	Screw	
2	36165	Plastic Boot	
3	03950	Screw	
4	501483	Coin Slide Extension	
5	35249	Timer Bracket	Not included in 552P3 Coin Slide Kit
6	36163	Actuator Support	
7	36164	Actuator	

© Copyright, Alliance Laundry Systems LLC – DO NOT COPY or TRANSMIT

Coin Drop, Meter Case and Service Door

Models EA2820*, EA2821*, EA2920* and EA2921*

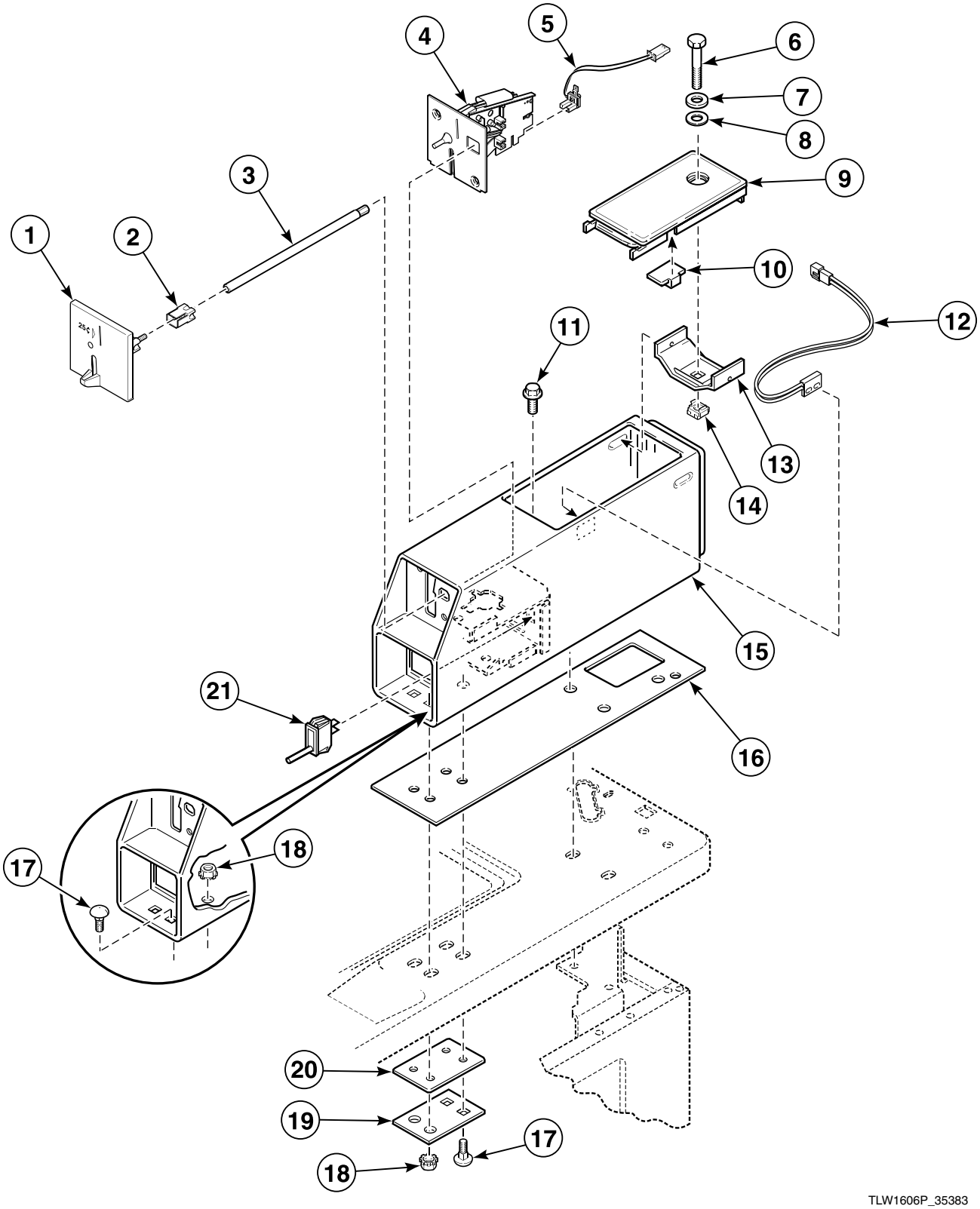

© Copyright, Alliance Laundry Systems LLC – DO NOT COPY or TRANSMIT

Coin Drop, Meter Case and Service Door

REF	PART NO.	DESCRIPTION	COMMENTS
1	201191	Rejector Faceplate	For use with 39873 Coin Drop
2	200820	Expansion Plug	For use with 39873 Coin Drop
3	N/A	Locking Rod	
4	39873P	Coin Drop	Replaces Airpax rejector and drop assembly
5	200824P	Opto Coupler	For use with metal drops only
6	503673	Screw	
7	35917	Washer	Metal
8	35774	Washer	Vinyl
9	35798WP	Service Door Assembly	White
	35798LP	Service Door Assembly	Almond
10	501453	Magnet	
11	36048	Screw	
12	34599	Reed Switch	
13	30642	Meter Case Locking Bracket	
14	30647	Nut	
15	38542WP	Meter Case Kit	White
	38542LP	Meter Case Kit	Almond
16	26354	Meter Case Gasket	
17	02505	Bolt	
18	29786	Nut	
19	35525	Meter Case Lockdown Bracket	
20	35526	Meter Case Bracket Gasket	
21	504570	Switch	

*** Add Letter To Designate Color. L - Almond W - White**

N/A = Part no longer available

© Copyright, Alliance Laundry Systems LLC – DO NOT COPY or TRANSMIT

Control Panel, Control Hood and Controls (Drawing 1 of 4)

Models EA2011*, EA2020*, EA2021*, EA2110*, EA2111*, EA2120*, EA2121*, EA2210*, EA2220*, EA2221*, EA2520*, EA2521* and JA0110*T

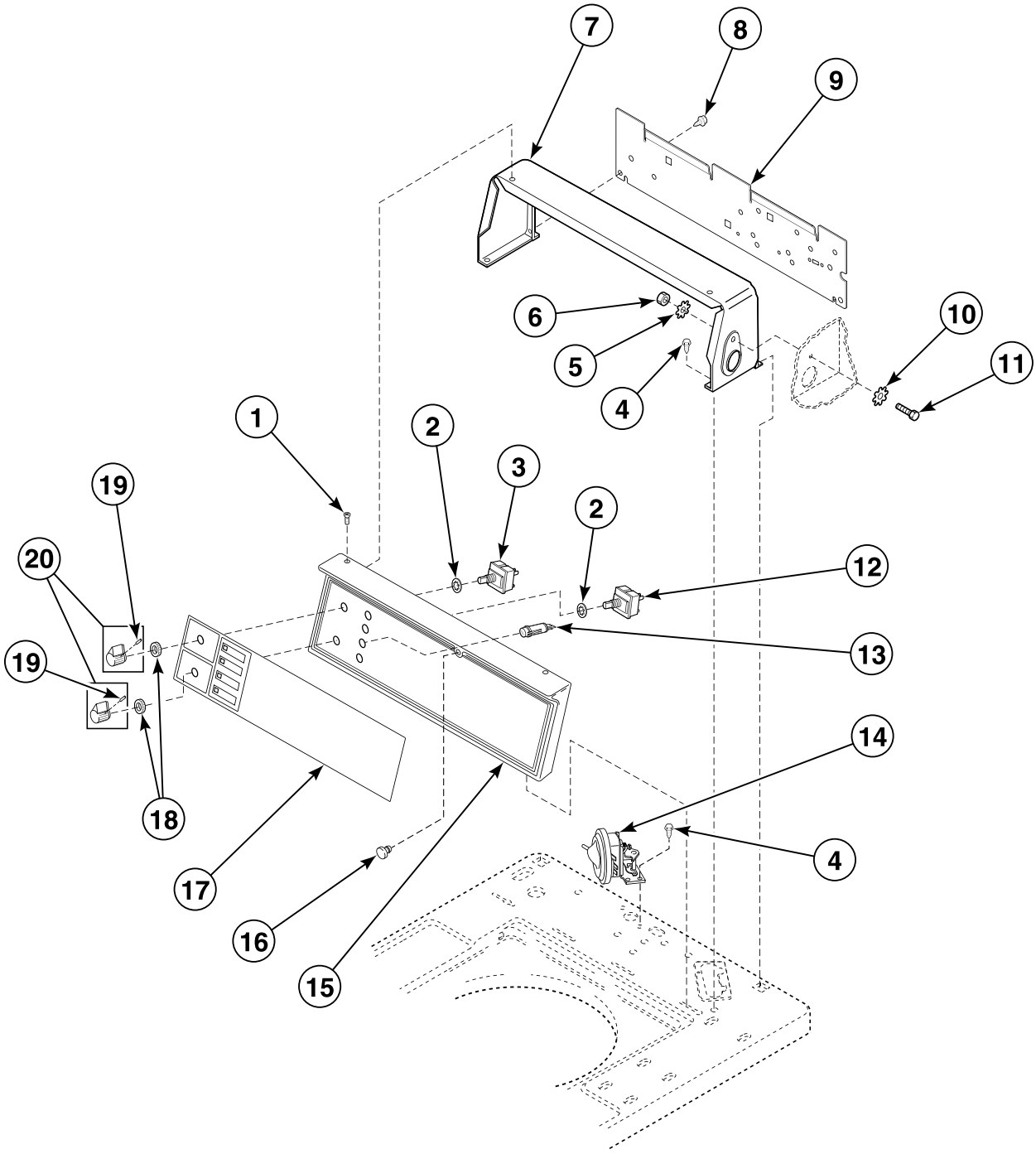

W119PZ3D_35383

© Copyright, Alliance Laundry Systems LLC – DO NOT COPY or TRANSMIT

Control Panel, Control Hood and Controls (Drawing 1 of 4)

REF	PART NO.	DESCRIPTION	COMMENTS
1	500226	Screw	Phillips head
	35528	Screw	Torx head
2	91176	Washer	
3	27761	Switch	
4	23962	Screw	
5	02431	Washer	
6	52566	Nut	
7	37075W	Control Hood	White
	37075L	Control Hood	Almond
8	23222	Screw	
9	38267	Hood Back Panel	
10	M400017	Washer	
11	02916	Screw	
12	27762	Switch	2 speed models
13	32464	Light	Models EA2011*, EA2020* and EA2021*; 4 required
	32463	Unbalance Light	Unbalanced load; All other models
	32466	Light	In use; All other models
	32464	Light	Rinse or spin; All other models
14	35889P	Pressure Switch	
15	36521WP	Control Panel and Bracket Assembly	White
	36521LP	Control Panel and Bracket Assembly	Almond
16	32648	Control Panel Bumper	
17	32460	Graphic Overlay	Models EA2011*, EA2110*, EA2111* and EA2210*
	32472	Graphic Overlay	Models EA2020*, EA2021*, EA2120*, EA2121*, EA2220*, EA2221*, EA2520* and EA2521*
	N/A	Control Panel Overlay	Model JA0110*T
18	24205	Nut	
19	N/A	Screw	
20	39897	Switch Knob	

*** Add Letter To Designate Color. L - Almond W - White**

N/A = Part no longer available

© Copyright, Alliance Laundry Systems LLC – DO NOT COPY or TRANSMIT

Control Panel, Control Hood and Controls (Drawing 2 of 4)

Model EA2311*

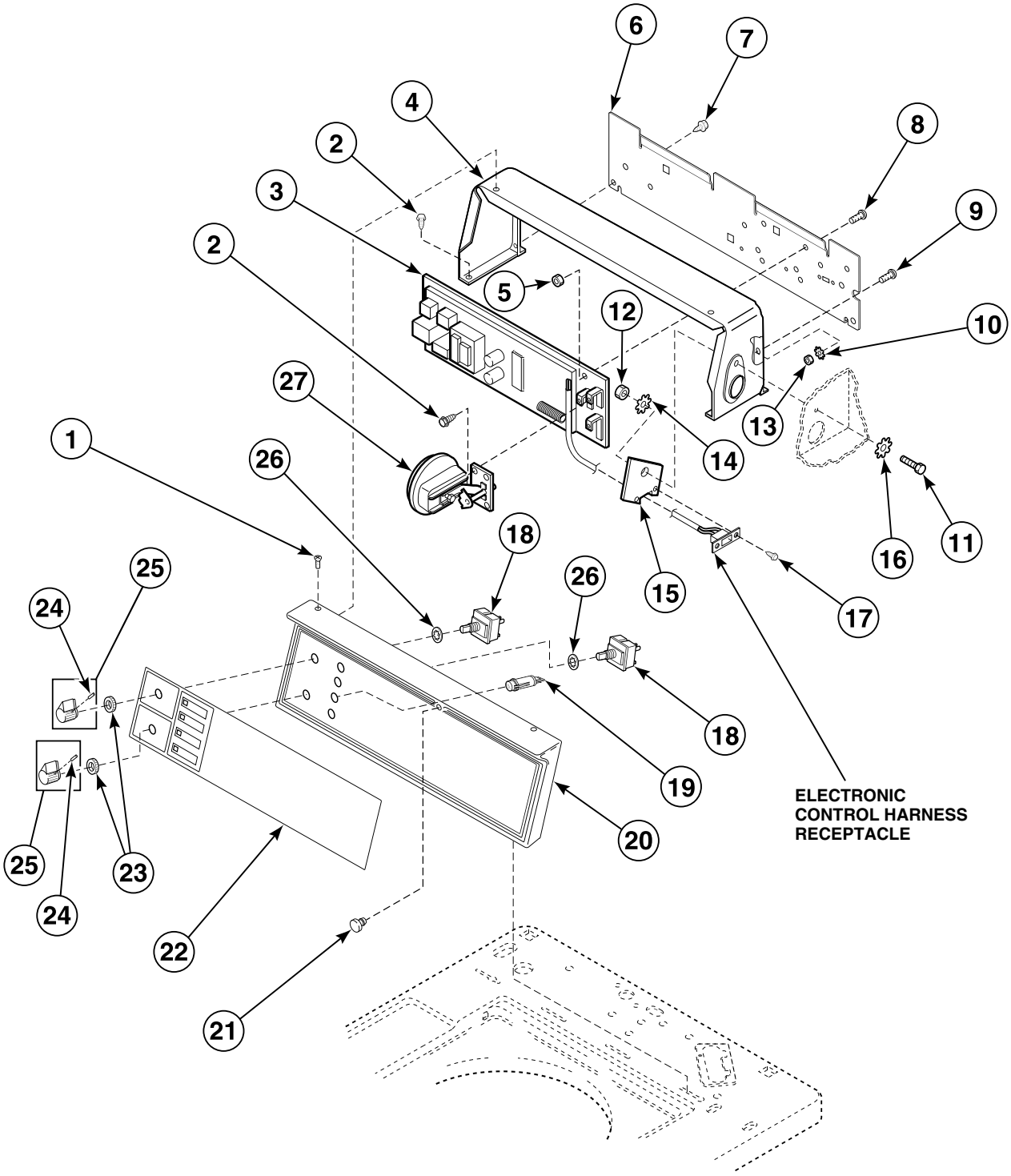

W120PZ3B_35383

© Copyright, Alliance Laundry Systems LLC – DO NOT COPY or TRANSMIT

Control Panel, Control Hood and Controls (Drawing 2 of 4)

REF	PART NO.	DESCRIPTION	COMMENTS
1	500226	Screw	Phillips head
	35528	Screw	Torx head
2	23962	Screw	
3	33422P	Control and Bracket Assembly	
4	37075W	Control Hood	White
	37075L	Control Hood	Almond
5	23951	Nut	
6	38267	Hood Back Panel	
7	23222	Screw	
8	03814	Screw	
9	20267	Screw	
10	03815	Washer	
11	02916	Screw	
12	52566	Nut	
13	03673	Nut	
14	02431	Washer	
15	N/A	Bracket	
16	M400017	Washer	
17	N/A	Screw	
18	27761	Switch	
19	32465	Indicator Light	Unbalanced load
	801431	Light	In use, rinse or spin
20	36521WP	Control Panel and Bracket Assembly	White
	36521LP	Control Panel and Bracket Assembly	Almond
21	32648	Control Panel Bumper	
22	32479	Graphic Overlay	
23	24205	Nut	
24	N/A	Screw	
25	39897	Switch Knob	
26	91176	Washer	
27	35889P	Pressure Switch	

*** Add Letter To Designate Color. L - Almond W - White**

N/A = Part no longer available

© Copyright, Alliance Laundry Systems LLC – DO NOT COPY or TRANSMIT

Control Panel, Control Hood and Controls (Drawing 3 of 4)

Models EA2610*, EA2620*, EA2621*, EA2710* and EA2721*

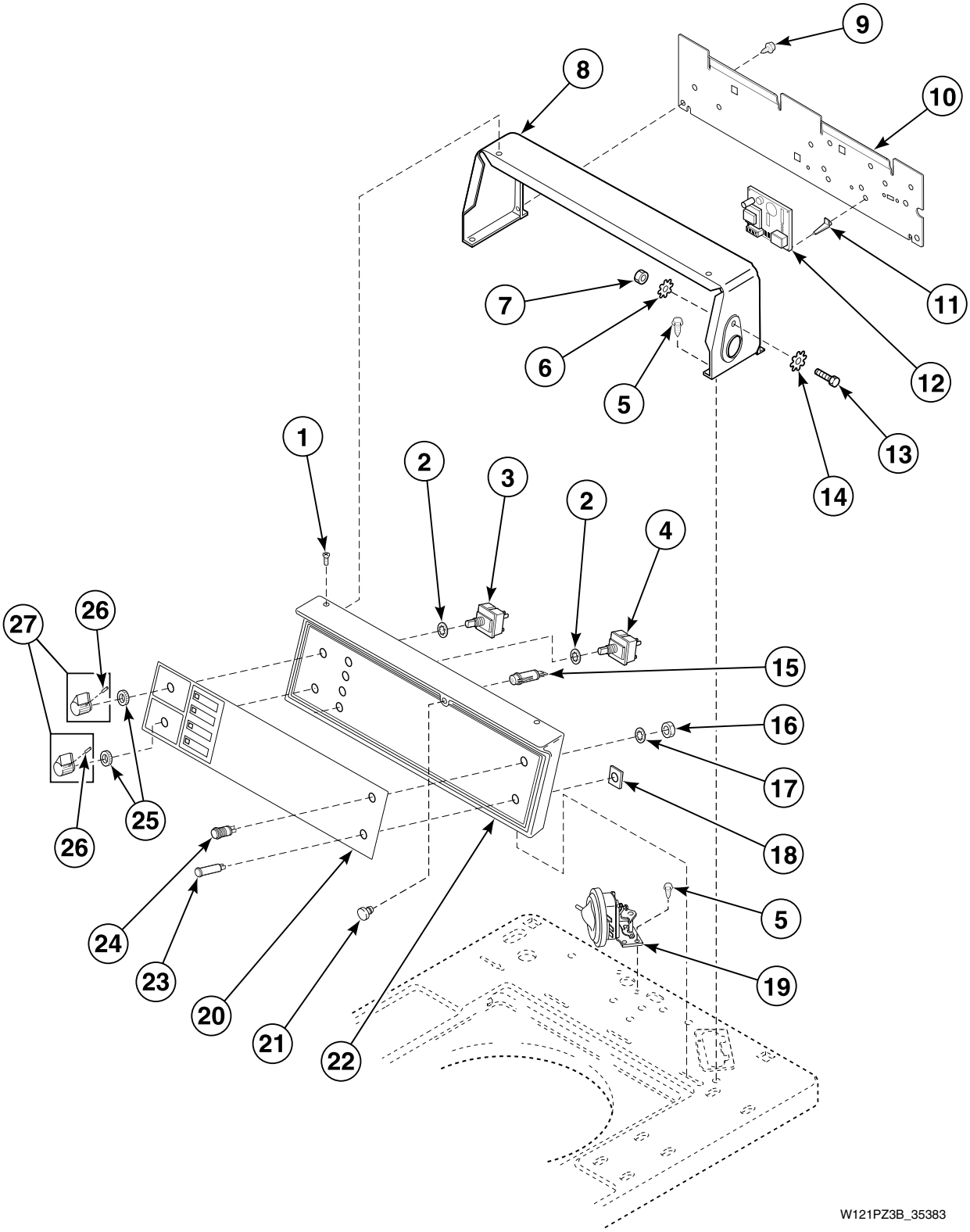

© Copyright, Alliance Laundry Systems LLC – DO NOT COPY or TRANSMIT

Control Panel, Control Hood and Controls (Drawing 3 of 4)

REF	PART NO.	DESCRIPTION	COMMENTS
1	500226	Screw	Phillips head
	35528	Screw	Torx head
2	91176	Washer	
3	27761	Switch	
4	27762	Switch	
5	23962	Screw	
6	02431	Washer	
7	52566	Nut	
8	37075W	Control Hood	White
	37075L	Control Hood	Almond
9	23222	Screw	
10	38267	Hood Back Panel	
11	34896	Circuit Board Support	
12	N/A	Audit Control	
13	02916	Screw	
14	M400017	Washer	
15	32463	Unbalance Light	Unbalanced load
	32466	Light	In use
	32464	Light	Rinse or spin
16	N/A	Nut	
17	N/A	Washer	
18	34762	Push-On Clip	
19	35889P	Pressure Switch	
20	N/A	Graphic Overlay	Models EA2610* and EA2710*
	34699	Graphic Overlay	Models EA2620*, EA2621* and EA2721*
21	32648	Control Panel Bumper	
22	36521WP	Control Panel and Bracket Assembly	White
	36521LP	Control Panel and Bracket Assembly	Almond
23	34701	Transmit Light	
24	N/A	Transmit Switch	
25	24205	Nut	
26	N/A	Screw	
27	39897	Switch Knob	

*** Add Letter To Designate Color. L - Almond W - White**

N/A = Part no longer available

© Copyright, Alliance Laundry Systems LLC – DO NOT COPY or TRANSMIT

Control Panel, Control Hood and Controls (Drawing 4 of 4)

Models EA2820*, EA2821*, EA2920* and EA2921*

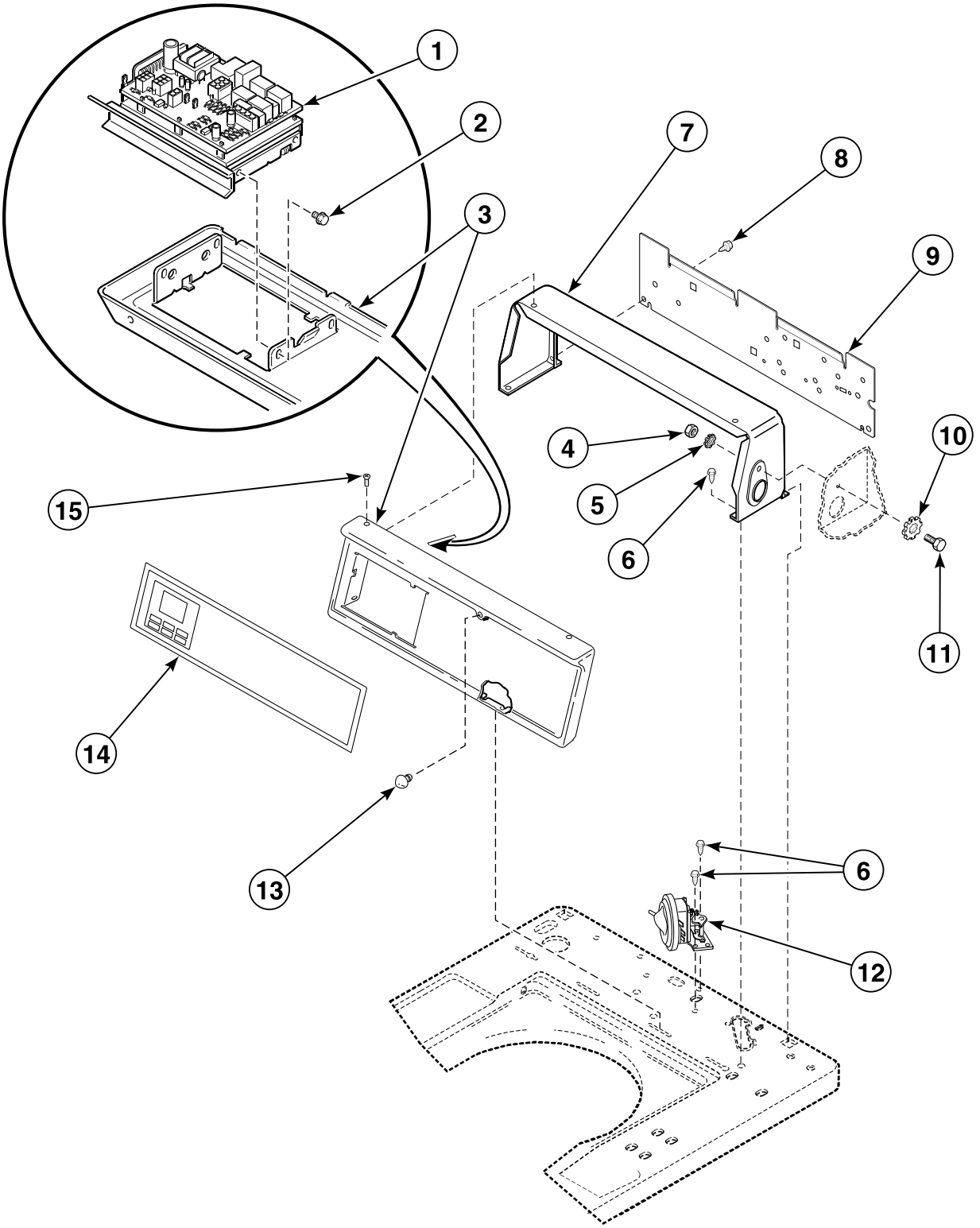

© Copyright, Alliance Laundry Systems LLC – DO NOT COPY or TRANSMIT

Control Panel, Control Hood and Controls (Drawing 4 of 4)

REF	PART NO.	DESCRIPTION	COMMENTS
1	38188P	Control, Shield and Tape Kit	
2	501524	Screw	
3	36097W	Control Panel Assembly	White
	36097L	Control Panel Assembly	Almond
4	52566	Nut	
5	02431	Washer	
6	23962	Screw	
7	37075W	Control Hood	White
	37075L	Control Hood	Almond
8	23222	Screw	
9	38267	Hood Back Panel	
10	M400017	Washer	
11	02916	Screw	
12	35889P	Pressure Switch	
13	32648	Control Panel Bumper	
14	39096	Control Panel Overlay	
15	500226	Screw	Phillips head
	35528	Screw	Torx head

*** Add Letter To Designate Color. L - Almond W - White**

© Copyright, Alliance Laundry Systems LLC – DO NOT COPY or TRANSMIT

Cabinet Top and Loading Door

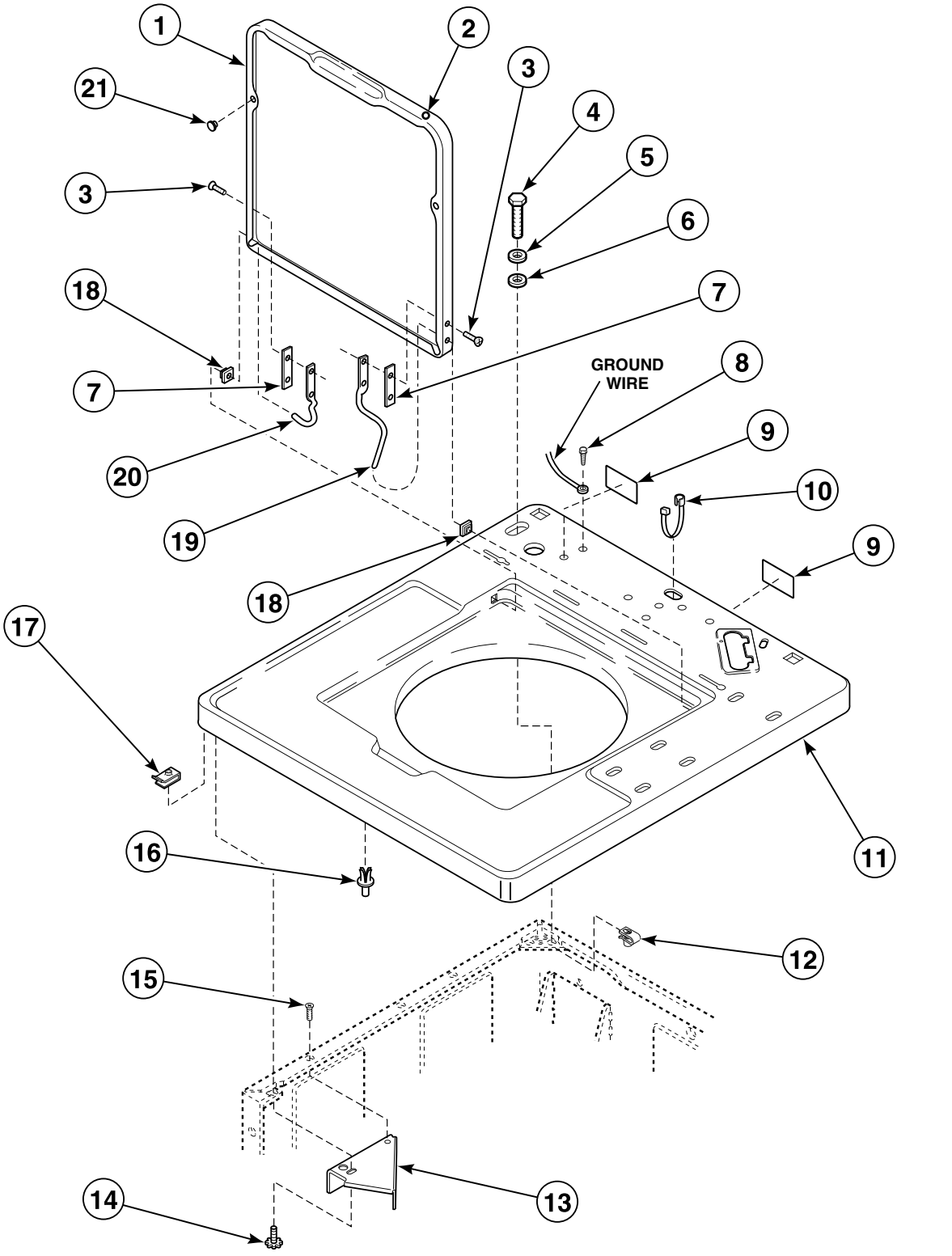

W123PZ3B_35383

© Copyright, Alliance Laundry Systems LLC – DO NOT COPY or TRANSMIT

Cabinet Top and Loading Door

REF	PART NO.	DESCRIPTION	COMMENTS
1	33845WP	Lid	White; Painted
	33845LP	Lid	Almond; Painted
	201460WP	Lid	White; Porcelain
	201460LP	Lid and Carton Assembly	Almond; Porcelain
2	34153	Lid Plug	
3	34337	Screw	
4	503673	Screw	Optional; For added security
5	35917	Washer	Metal; Optional; For added security
6	35774	Washer	Vinyl; Optional; For added security
7	34338	Hinge Gasket	
8	52909	Screw	
9	505281	Disconnect Power Warning Label	
10	38384	Strain Relief	
11	36120WP	Top Assembly	White; Painted; Metered models
	36120LP	Top Assembly	Almond; Painted; Metered models
	36122WP	Top Assembly	White; Porcelain; Metered models
	36122LP	Top Assembly	Almond; Porcelain; Metered models
	N/A	Cabinet Top	Painted; Nonmetered models
	36273WP	Top Assembly	White; Porcelain; Nonmetered models
	36273LP	Top Assembly	Almond; Porcelain; Nonmetered models
12	27222	Nut	Optional; For added security
13	36034	Director Bracket	
14	23008	Screw	
15	N/A	Screw	
16	56534	Support Barrel	
17	36020	Nut	
18	36474	Hinge Bushing	
19	36437	Lid Hinge	Right
20	36438	Lid Hinge	Left
21	21685	Bumper	

N/A = Part no longer available

© Copyright, Alliance Laundry Systems LLC – DO NOT COPY or TRANSMIT

Out-of-Balance Switch

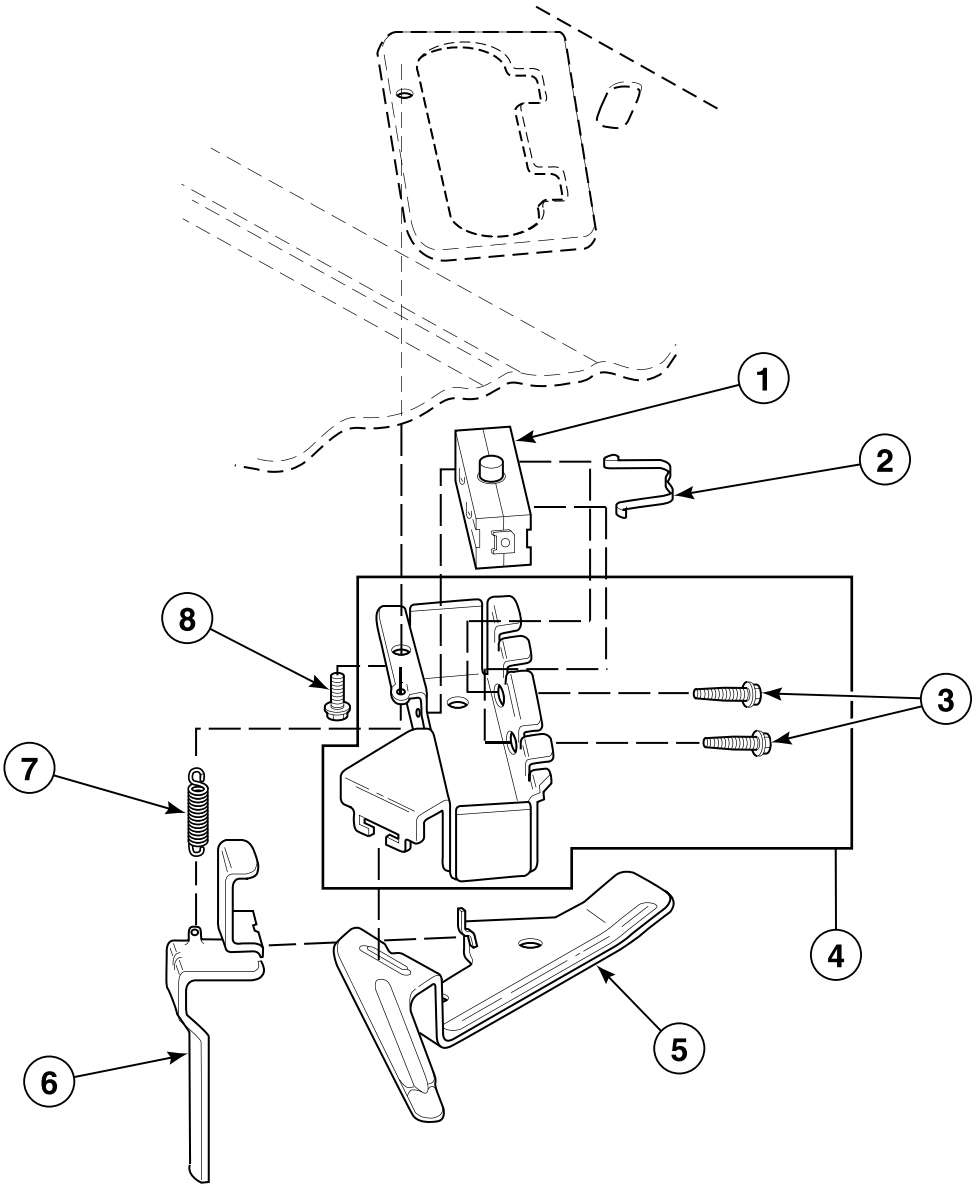

W209P_35383

© Copyright, Alliance Laundry Systems LLC – DO NOT COPY or TRANSMIT

Out-of-Balance Switch

REF	PART NO.	DESCRIPTION	COMMENTS
1	33445	Switch	Models EA2820*, EA2821*, EA2920* and EA2921*
	33527	Snap Switch	All other models
2	33433	Switch Holder Clip	For models using 33440 Switch Holder
3	36510	Screw	For models using 36497P Switch Holder Kit
4	36497P	Switch Holder Kit	Replaces 33440 Switch Holder
5	33441	Actuator Arm	
6	33442	Unbalanced Load Lever	
7	33443	Spring	
8	23962	Screw	

*** Add Letter To Designate Color. L - Almond W - White**

© Copyright, Alliance Laundry Systems LLC – DO NOT COPY or TRANSMIT

Motor, Mounting Bracket, Belts and Idler Assembly

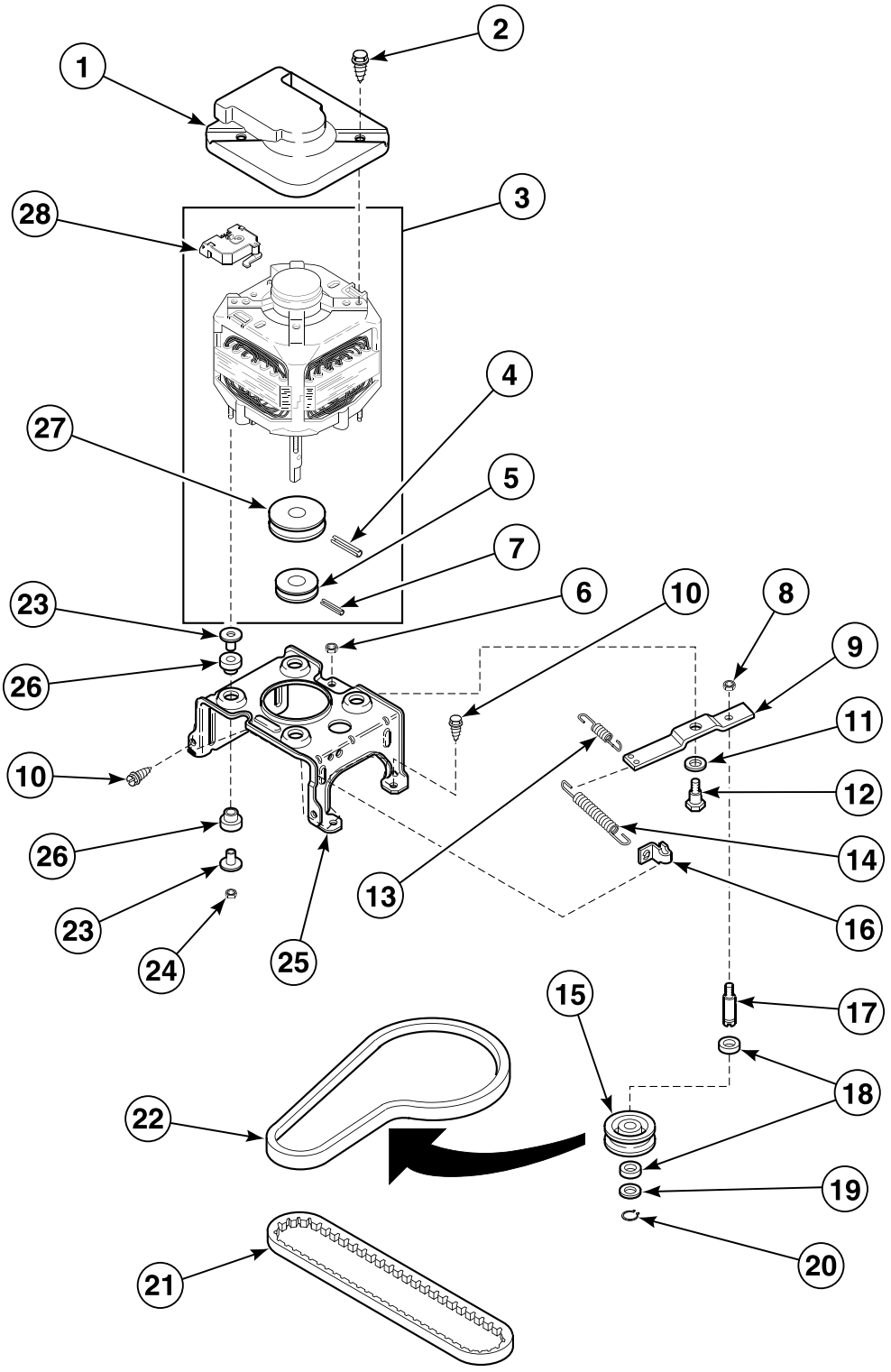

W235P_35383

© Copyright, Alliance Laundry Systems LLC – DO NOT COPY or TRANSMIT

Motor, Mounting Bracket, Belts and Idler Assembly

REF	PART NO.	DESCRIPTION	COMMENTS
	258P3	Capacitor Kit	For use in areas where low voltage exists
1	34754	Motor Shield	
2	36639	Screw	
3	35485P	Motor Assembly	
4	N/A	Roll Pin	
5	27104	Motor Pulley	Pump
6	52566	Nut	
7	10416	Roll Pin	
8	28803	Nut	
9	31054	Idler Lever	
10	503661	Screw	
11	81392	Washer	
12	27229	Screw	
13	N/A	Idler Lever Helper Spring	
14	37366	Idler Spring	
15	28800P	Idler Pulley	
16	28849	Spring Clip	
17	28802P	Idler Shaft	
18	29443	Washer	Felt
19	52549	Washer	Nylatron
20	23748	Retaining Ring	
21	27155	Pump Belt	Pump
22	28808	Belt	Agitate and spin
23	34791	Motor Mount Post	
24	35423	Nut	
25	N/A	Mounting Bracket	
26	34788	Motor Mount	Rubber
27	N/A	Motor Pulley	
28	35632P	Motor Switch	

N/A = Part no longer available

© Copyright, Alliance Laundry Systems LLC – DO NOT COPY or TRANSMIT

Inlet Hose, Fill Hose and Mixing Valve and Mounting Bracket

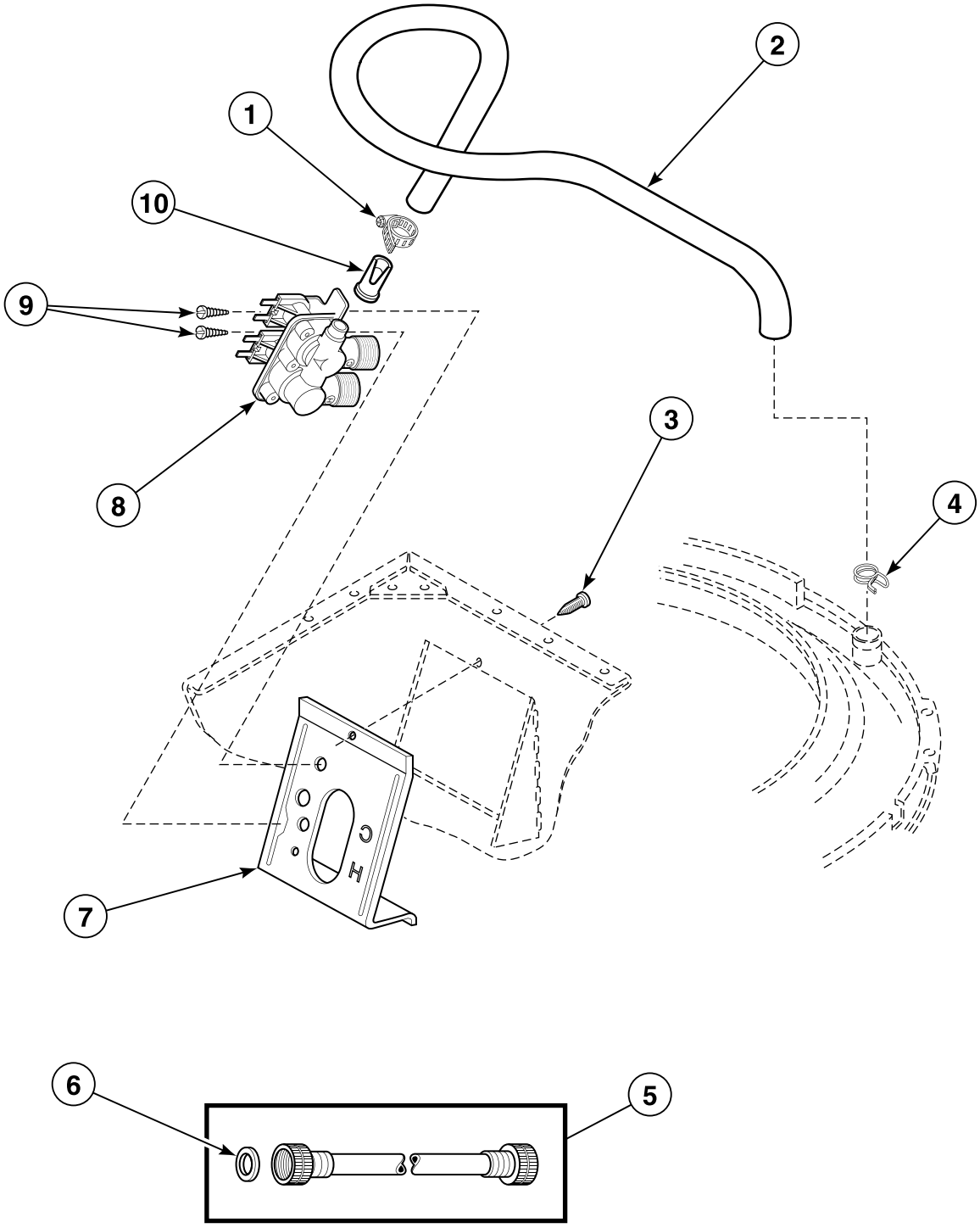

© Copyright, Alliance Laundry Systems LLC – DO NOT COPY or TRANSMIT

Inlet Hose, Fill Hose and Mixing Valve and Mounting Bracket

REF	PART NO.	DESCRIPTION	COMMENTS
1	36801	Hose Clamp	
2	38155	Mixing Valve-to-Tub Cover Hose	
3	33562	Screw	
4	29210	Hose Clamp	Gold
5	28330P	Fill Hose Kit	
6	20290	Washer	
7	39407	Mixing Valve Mounting Bracket	
8	34963P	Mixing Valve	
9	23962	Screw	
10	34500	Backflow Preventer	

© Copyright, Alliance Laundry Systems LLC – DO NOT COPY or TRANSMIT

Agitator, Drive Bell, Seal Kit, Washtub and Hub

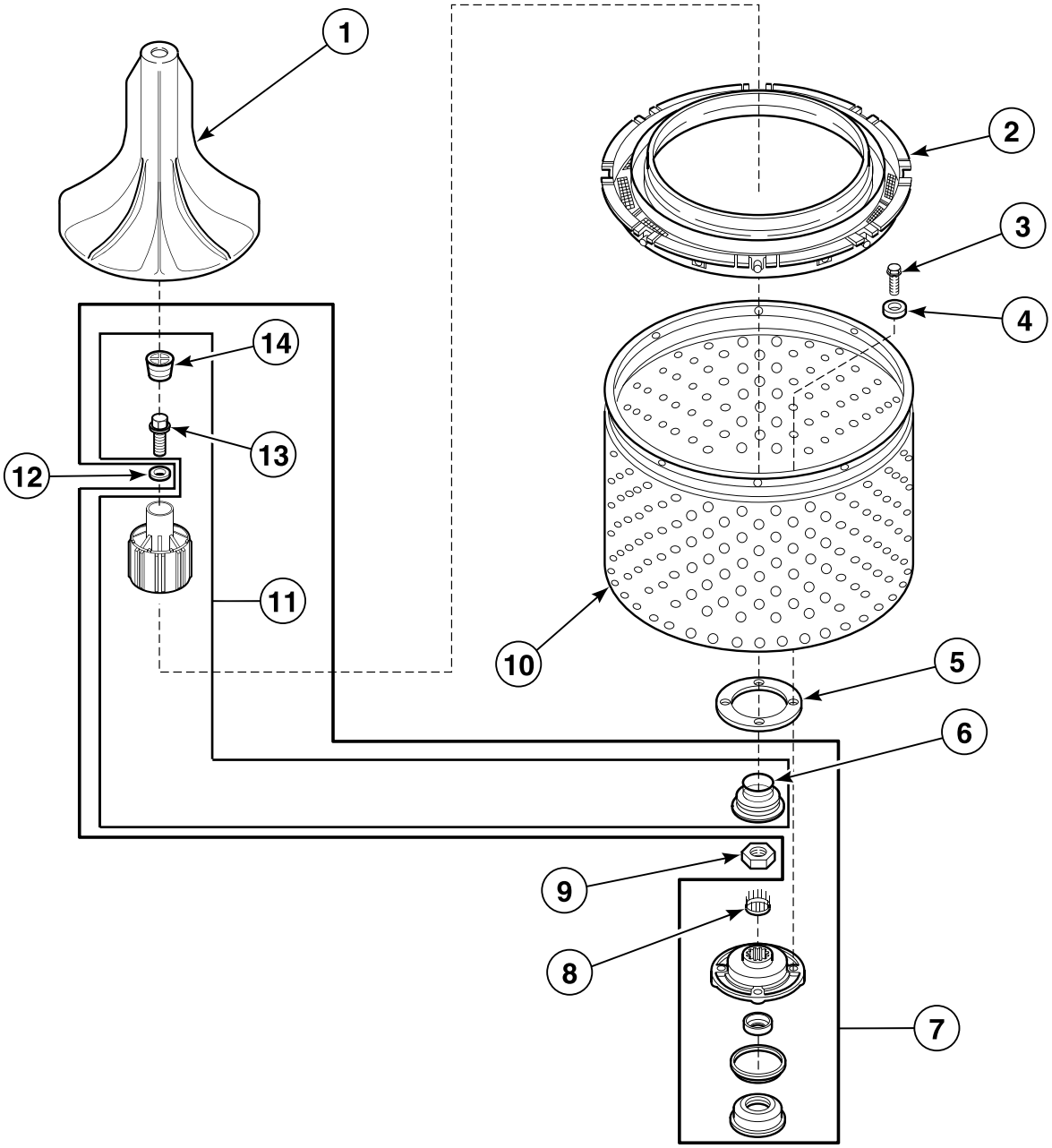

W227P_35383

© Copyright, Alliance Laundry Systems LLC – DO NOT COPY or TRANSMIT

Agitator, Drive Bell, Seal Kit, Washtub and Hub

REF	PART NO.	DESCRIPTION	COMMENTS
1	33513	Agitator	
2	32990	Clothes Guard	
3	27202	Screw	
4	28094	Washer	
5	39122	Washtub Gasket	
6	36425	Bell and Transmission Tube Seal	
7	495P3	Hub and Seal Kit	Includes 32857 Tub Cover Gasket and items 8 and 11
8	29728	Spline Insert	
9	29220	Nut	
10	39252P	Tub Assembly	Porcelain
	39387P	Tub Assembly	Stainless steel
11	39508P	Drive Bell and Seal Kit	Includes items 6, 13 and 14
12	36472	O-Ring	
13	39432	Screw	
14	36511	Bell Plug	

© Copyright, Alliance Laundry Systems LLC – DO NOT COPY or TRANSMIT

Outer Tub, Cover and Pressure Hose

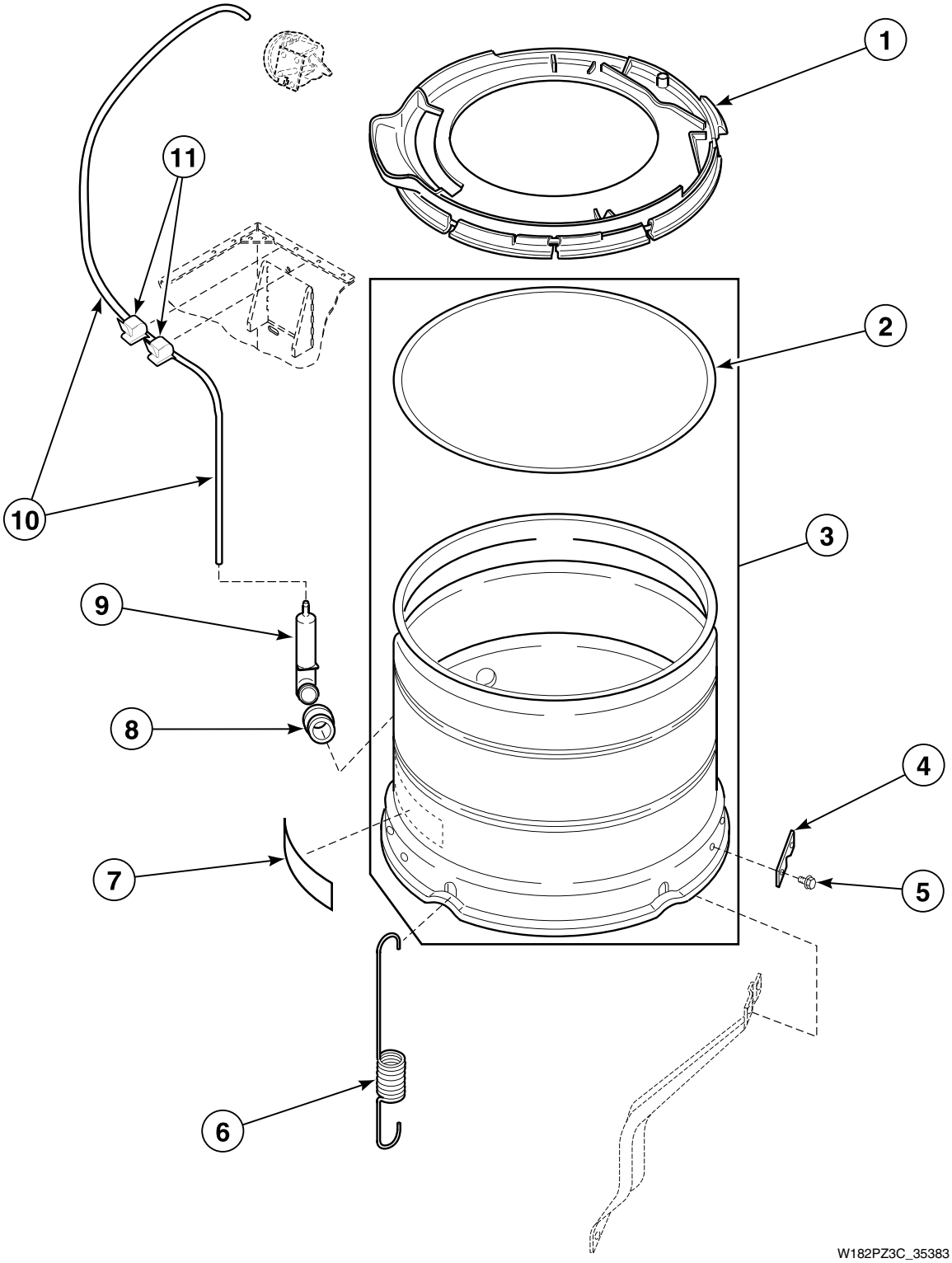

© Copyright, Alliance Laundry Systems LLC – DO NOT COPY or TRANSMIT

Outer Tub, Cover and Pressure Hose

REF	PART NO.	DESCRIPTION	COMMENTS
1	36025P	Tub Cover Kit	Includes item 2
2	32857	Tub Cover Gasket	
3	34439P	Outer Tub Kit	
4	27926	Leg Plate	
5	35369	Screw	
6	35947	Tub Spring	7 required
7	500049	Warning Label	
8	29175	Grommet	
9	30907	Pressure Bulb	
10	39125	Tubing	Models EA2311*, EA2820*, EA2821*, EA2920* and EA2921*
	39124	Tubing	All other models
11	21036	Cable Clip	

*** Add Letter To Designate Color. L - Almond W - White**

© Copyright, Alliance Laundry Systems LLC – DO NOT COPY or TRANSMIT

Pump Assembly, Bracket, Hoses and Siphon Break Kit

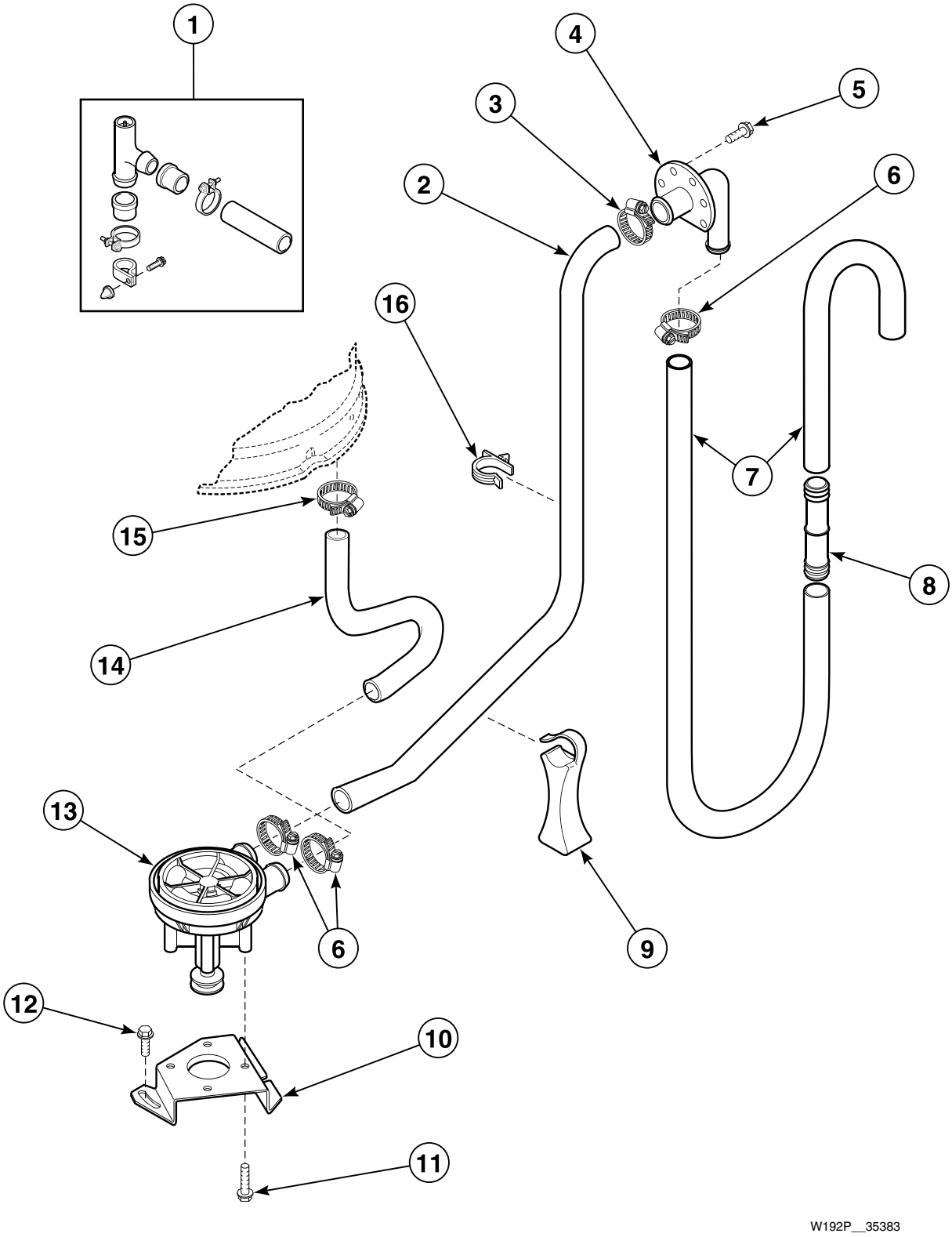

© Copyright, Alliance Laundry Systems LLC – DO NOT COPY or TRANSMIT

Pump Assembly, Bracket, Hoses and Siphon Break Kit

REF	PART NO.	DESCRIPTION	COMMENTS
1	562P3	Siphon Break Kit	Siphon break kit **MUST** be installed in drain hose if drain receptacle is lower than cabinet top of washer
2	27161	Pump-to-Drain Elbow Hose	
3	20391	Hose Clamp	
4	35766	Drain Hose Elbow	
5	52909	Screw	
6	20211	Hose Clamp	
7	28293	Drain Hose	
8	25863	Hose Coupler	If drain hose must be shortened, cut hose between molded end and molded elbow. Use (1) 25863 Hose Coupler to splice hose
9	35487	Hose Support	
10	35162	Pump Mounting Bracket	
11	N/A	Screw	
12	503661	Screw	
13	31969	Pump Assembly	Includes 4 of item 11
14	35754	Tub-to-Pump Hose	
15	36802	Hose Clamp	
16	39177	Hose Retainer Clip	

N/A = Part no longer available

© Copyright, Alliance Laundry Systems LLC – DO NOT COPY or TRANSMIT

Bearing Housing, Brake, Pulley and Pivot Dome

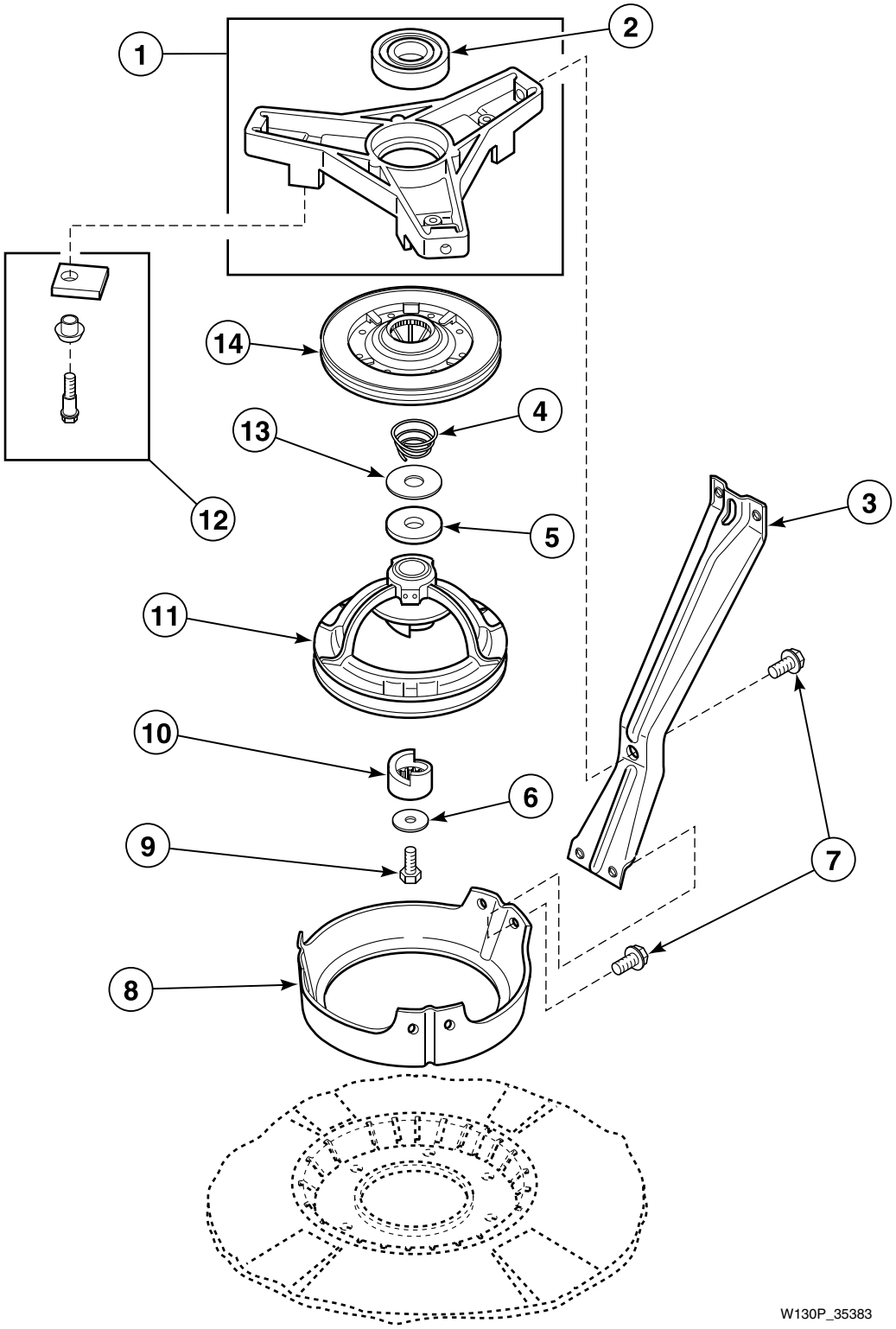

© Copyright, Alliance Laundry Systems LLC – DO NOT COPY or TRANSMIT

Bearing Housing, Brake, Pulley and Pivot Dome

REF	PART NO.	DESCRIPTION	COMMENTS
	26594P	Silicone Grease	Apply a small amount to each new brake pad
1	35746	Bearing Housing Assembly	
2	28944RP	Upper or Lower Bearing	
3	N/A	Support Leg	
4	33435	Spring	
5	27015	Washer	Thick
6	26509	Washer	
7	35369	Screw	
8	34470	Pivot Dome	
9	27220	Screw	
10	27018	Helix	
11	34923	Pulley Assembly	
12	548P3	Brake Pad Kit	Includes 3 pads, sleeves and screws
13	35535	Washer	Thin
14	38505P	Brake Kit	

N/A = Part no longer available

© Copyright, Alliance Laundry Systems LLC – DO NOT COPY or TRANSMIT

Transmission Assembly and Balance Ring

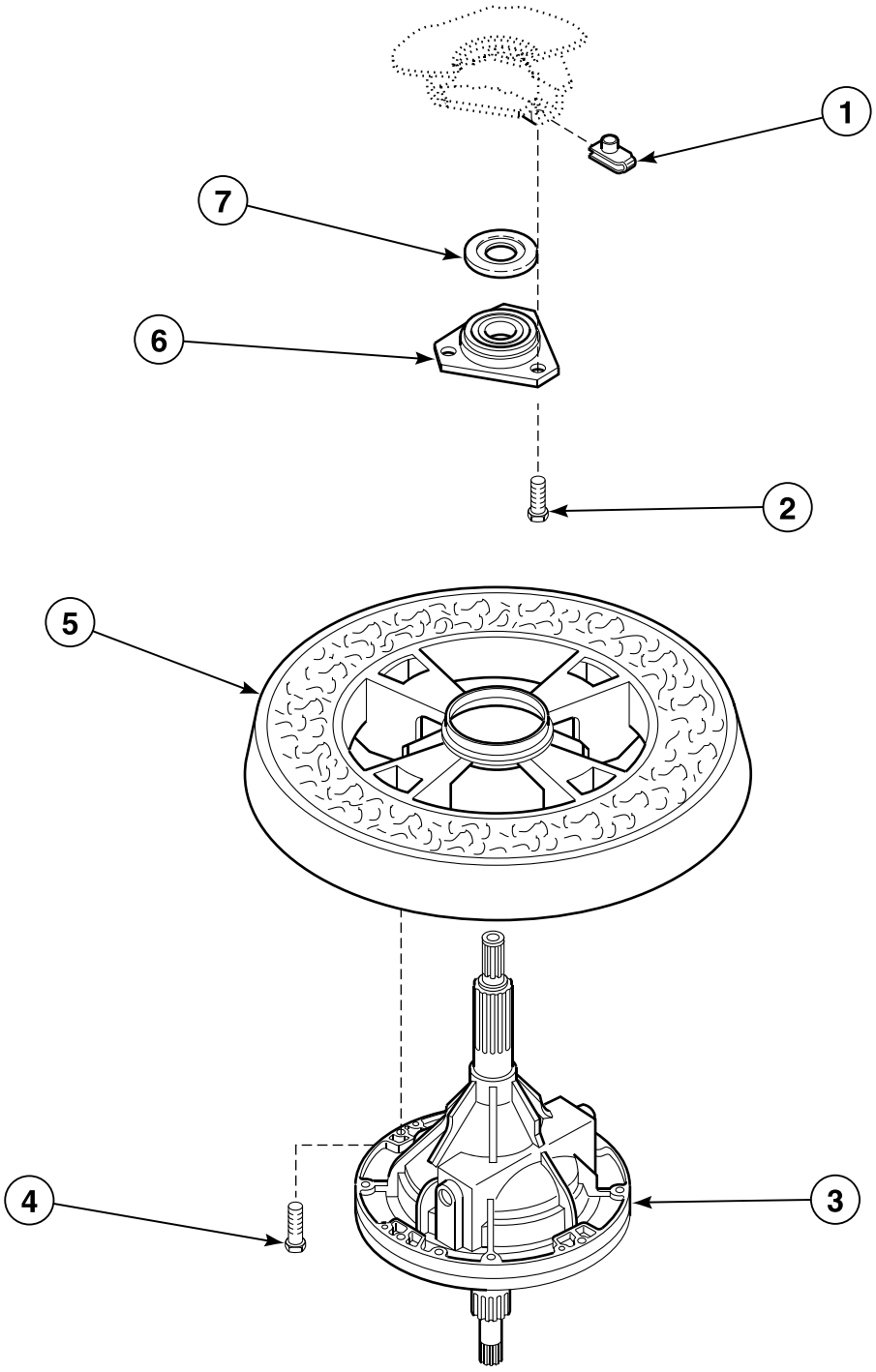

W234PZ3C_35383

© Copyright, Alliance Laundry Systems LLC – DO NOT COPY or TRANSMIT

Transmission Assembly and Balance Ring

REF	PART NO.	DESCRIPTION	COMMENTS
	27604P	Anti-Seize Compound	Apply to both the upper and lower transmission tubes
1	27222	Nut	
2	M400057	Screw	
3	34526P	Transmission Assembly	Refer to *Transmission Assembly* section for component parts
4	N/A	Screw	
5	34731P	Balance Ring Assembly	
6	27182	Bearing Housing Assembly	
7	27187	Flinger	Models through Serial No. 9510053575

N/A = Part no longer available

© Copyright, Alliance Laundry Systems LLC – DO NOT COPY or TRANSMIT

Transmission Assembly

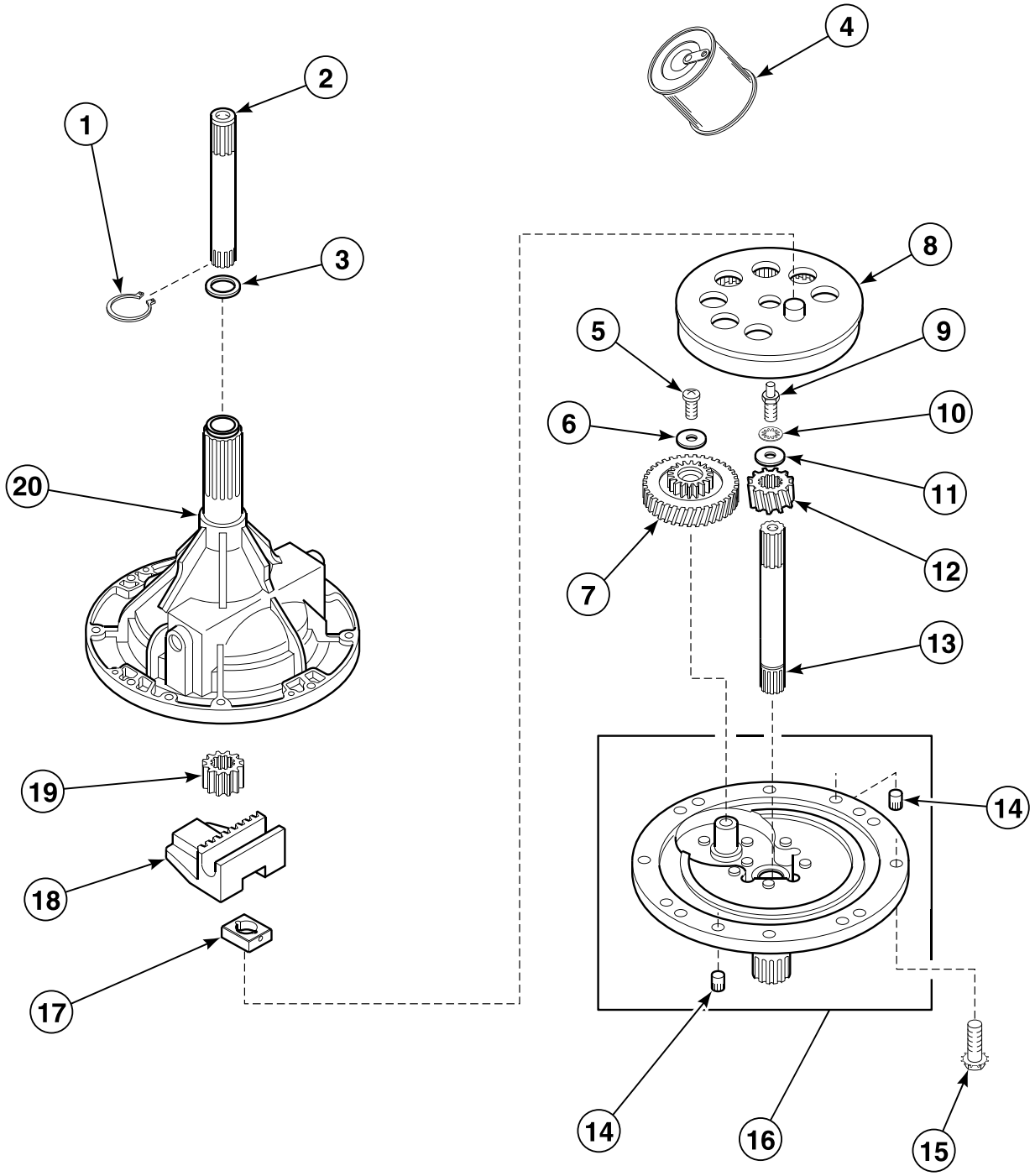

W132PZ3A_35383

© Copyright, Alliance Laundry Systems LLC – DO NOT COPY or TRANSMIT

Transmission Assembly

REF	PART NO.	DESCRIPTION	COMMENTS
	37577P	Transmission Sealant	Use between transmission case and cover
1	27197	Retaining Ring	
2	36570P	Output Shaft	
3	35092	Washer	
4	27243P	Transmission Oil	1 fill
5	29273	Screw	
6	29260	Washer	
7	29161P	Reduction Gear	
8	26577	Gear and Stud Assembly	
9	201773	Screw	
10	21456	Washer	
11	26509	Washer	
12	36562P	Drive Pinion	
13	34853P	Input Shaft	
14	N/A	Dowel Pin	
15	32814	Screw	
16	38290P	Transmission Cover Assembly	
17	26493	Slide	
18	201664	Rack	
19	27003	Agitator Pinion	
20	33223P	Transmission Case Assembly	

N/A = Part no longer available

© Copyright, Alliance Laundry Systems LLC – DO NOT COPY or TRANSMIT

Front Panel, Base Assembly and Cabinet Assembly

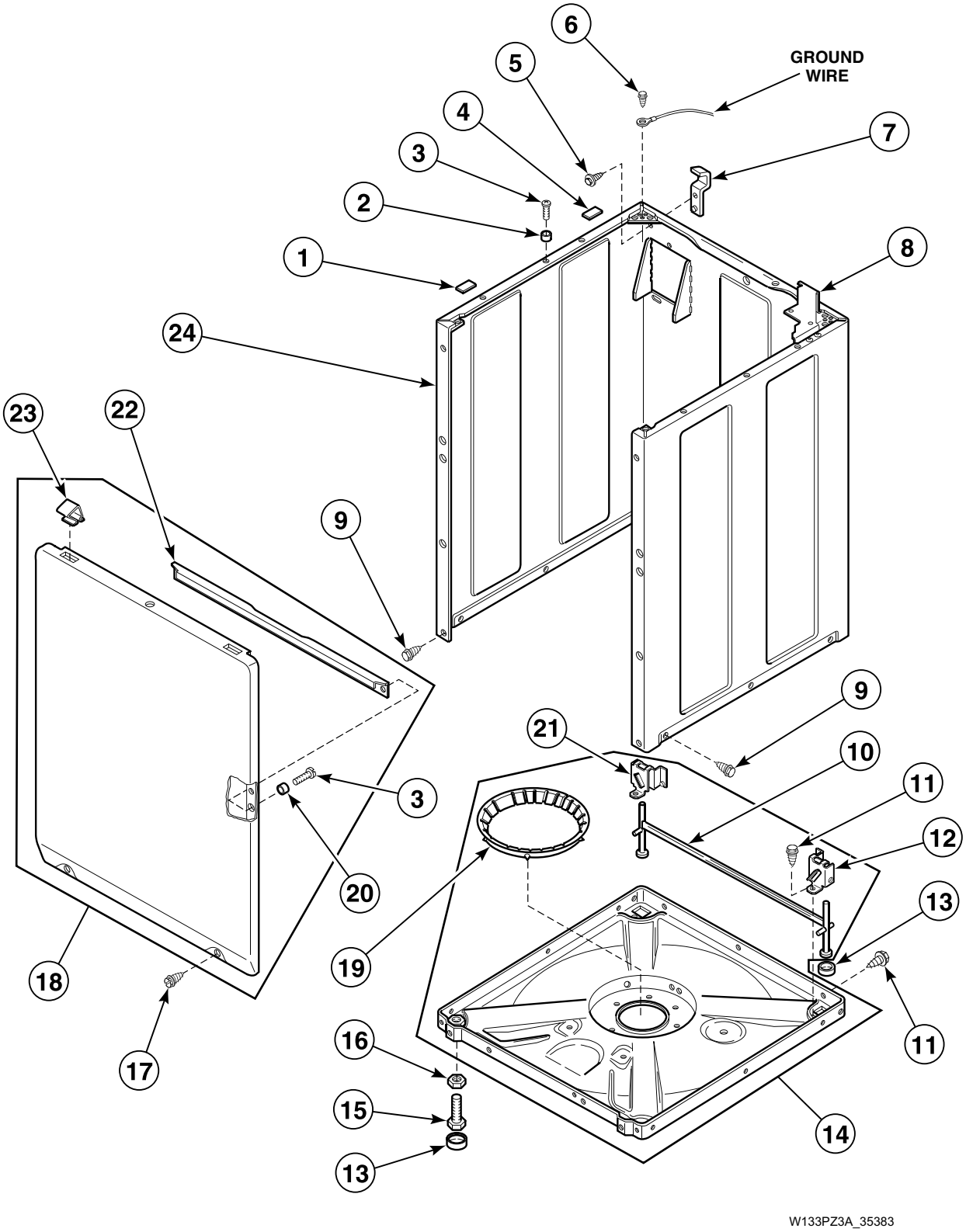

© Copyright, Alliance Laundry Systems LLC – DO NOT COPY or TRANSMIT

Front Panel, Base Assembly and Cabinet Assembly

REF	PART NO.	DESCRIPTION	COMMENTS
1	56128	Bumper Pad	Thin
2	56079	Panel Locator	
3	39733	Screw	
4	36226	Bumper Pad	Thick
5	51780	Screw	
6	23962	Screw	
7	27103	Hold-Down Lug Hinge	
8	35867	Meter Case Mounting Bracket Assembly	
9	27196	Screw	
10	34443	Leg and Stabilizer Assembly	
11	35148	Screw	
12	36036	Bracket	Right
13	34318	Rubber Foot	
14	34434P	Base Kit	Includes items 10-12, 19 and 21
15	34319	Leveling Leg	
16	21899	Nut	
17	27196	Screw	Slotted hex head
	35527	Screw	Torx head; Refer to *Special Tools* section for torx bit and holder
18	34656WP	Front Panel Assembly	White; Includes items 22, 23 and attaching hardware
	34656LP	Front Panel Assembly	Almond; Includes items 22, 23 and attaching hardware
19	36108	Snubber Pad Assembly	
20	28102	Panel Locator	
21	36037	Bracket	Left
22	35097	Front Panel Brace	
23	35865	Hold-Down Clip	
24	38612WP	Service Cabinet Kit	White
	38612LP	Service Cabinet Kit	Almond

© Copyright, Alliance Laundry Systems LLC – DO NOT COPY or TRANSMIT

Mixing Valve and Motor Disconnect Blocks, Terminals and Terminal Extractor Tool

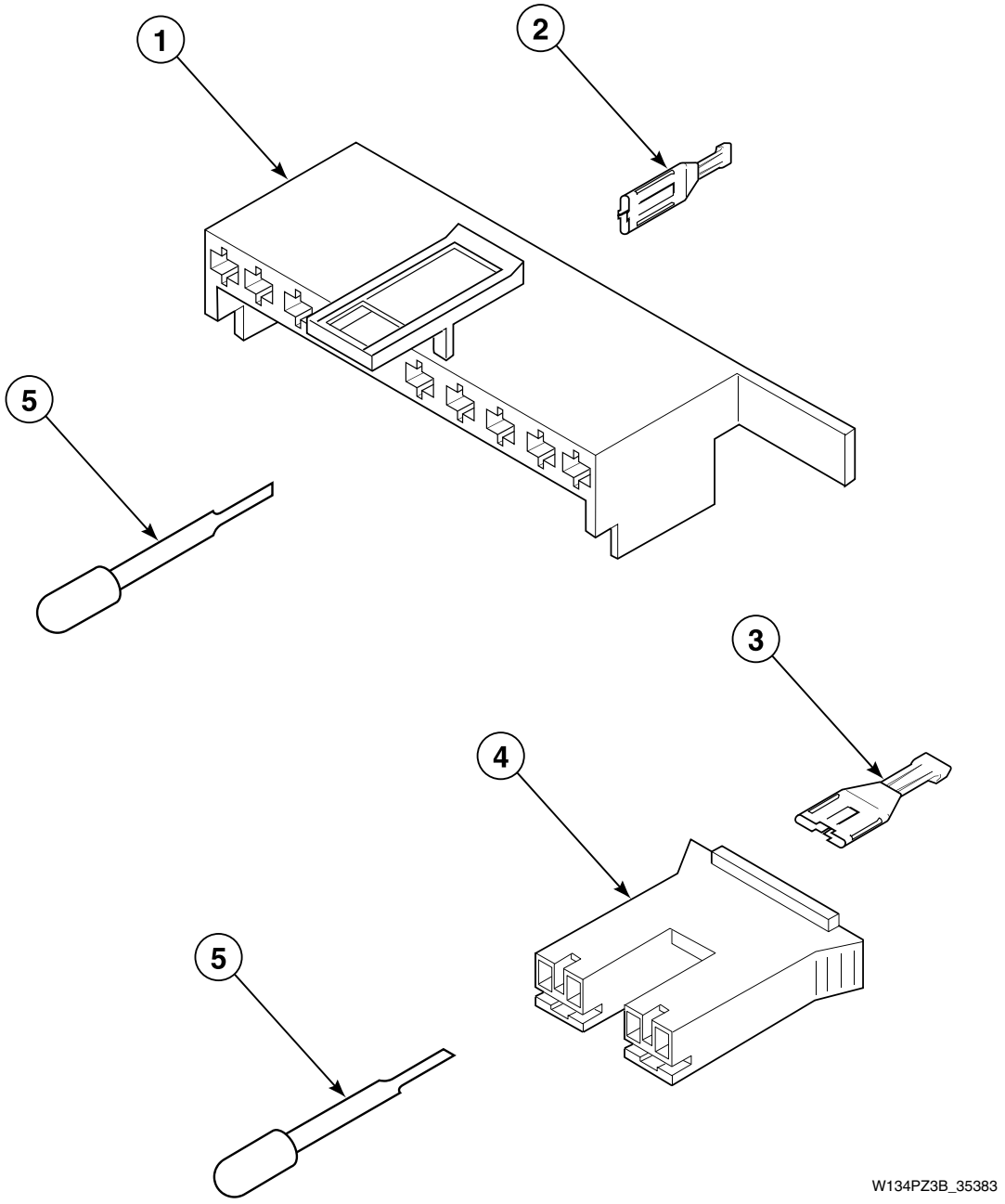

© Copyright, Alliance Laundry Systems LLC – DO NOT COPY or TRANSMIT

Mixing Valve and Motor Disconnect Blocks, Terminals and Terminal Extractor Tool

REF	PART NO.	DESCRIPTION	COMMENTS
1	34677	10 Circuit Plug	Motor
2	00188	Female Terminal	For 1 or 2 wire application
3	00121	Female Spade Terminal	1/4 inch
4	34675	Mixing Valve Plug	Natural
	34676	Mixing Valve Plug	Red
5	283P4	Terminal Extractor Tool	

© Copyright, Alliance Laundry Systems LLC – DO NOT COPY or TRANSMIT

Power Cord and Terminals

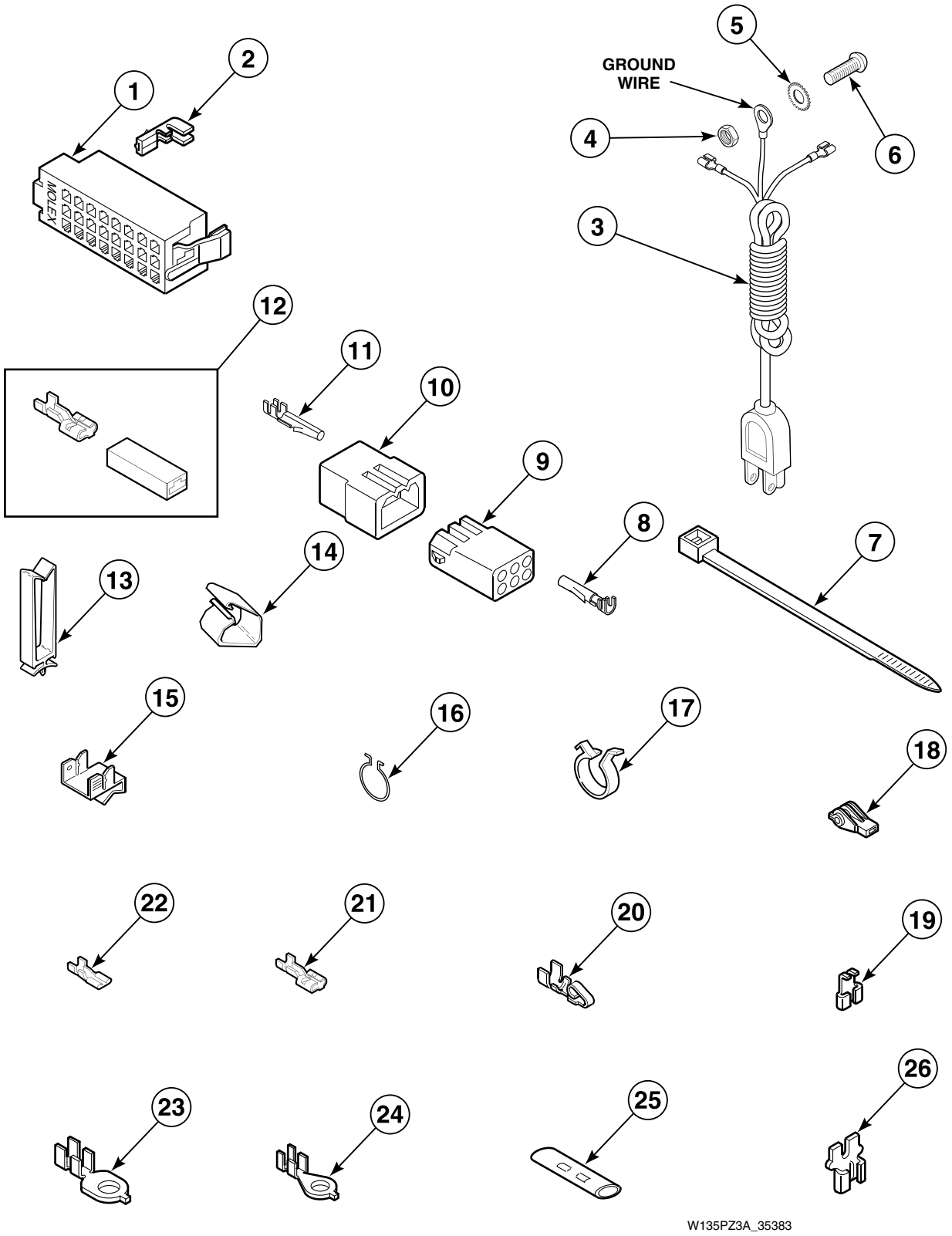

© Copyright, Alliance Laundry Systems LLC – DO NOT COPY or TRANSMIT

Power Cord and Terminals

REF	PART NO.	DESCRIPTION	COMMENTS
1	32746	24 Position Housing	Right hand
	34123	24 Position Housing	Left hand
2	00188	Female Terminal	Used for 1 or 2 wire application
3	34458	Lead-In Cord	Models EA2011*, EA2020*, EA2021*, EA2311*, EA2820*, EA2821*, EA2920* and EA2921*
	39404	Lead-In Cord	All other models
4	03673	Nut	
5	03815	Washer	
6	20267	Screw	
7	55881	Harness Strap	
8	00117	Female Pin Terminal	
9	26301	1 Circuit Receptacle	
	26708	6 Circuit Receptacle	
	26163	9 Circuit Receptacle	
10	26302	1 Circuit Plug	
	23041	6 Circuit Plug	
	23033	9 Circuit Plug	
11	00116	Male Pin Terminal	
12	00359	Ultra Pod Terminal	
13	36274	Wire Clip	
14	N/A	Harness Clip	
15	00161	Grounding Clip	
16	51291	Wire Clip	
17	504034	Wire Clip	
18	70210	Insulator	
19	00120	Female Flag Terminal	
20	N/A	Spade Terminal	Female; 1/4 inch
21	00223	Female Spade Terminal	Large spade
22	00112	Female Spade Terminal	Small spade
23	00113	Ring Terminal	1/4 inch ring
24	00110	Ring Terminal	Small shank
25	21091	Connector	
26	29673	Terminal Adapter	

*** Add Letter To Designate Color. L - Almond W - White**

N/A = Part no longer available

© Copyright, Alliance Laundry Systems LLC – DO NOT COPY or TRANSMIT

Special Tools (Drawing 1 of 2)

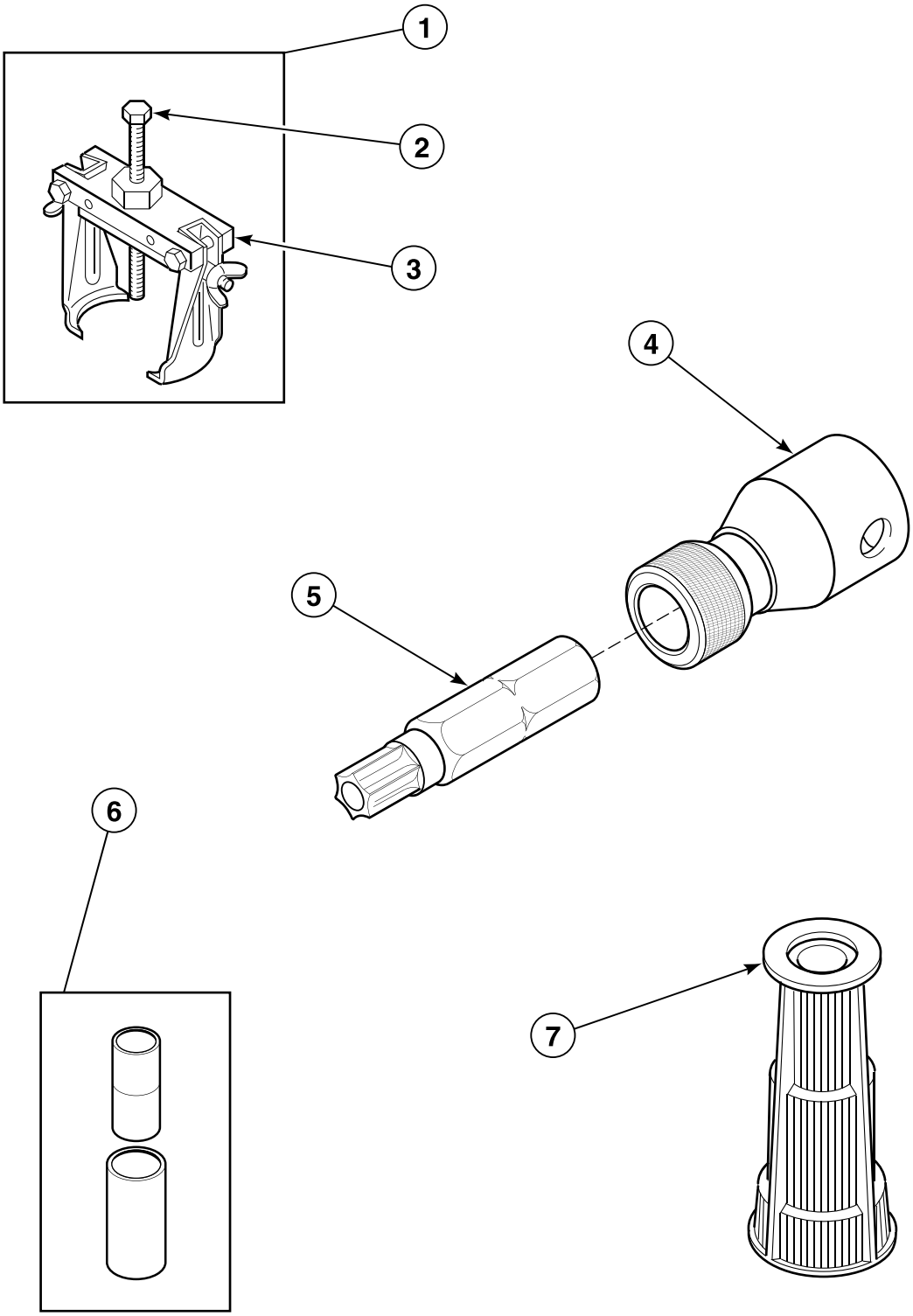

W399PZ3A_35383

© Copyright, Alliance Laundry Systems LLC – DO NOT COPY or TRANSMIT

Special Tools (Drawing 1 of 2)

REF	PART NO.	DESCRIPTION	COMMENTS
1	294P4	Agitator Drive Bell Puller	Replaces 253P4 Bell Puller; For removal and installation of drive bell to transmission shaft
2	294P4B	Bolt	Use to update 253P4 Bell Puller
3	294P4A	Drive Bell Puller Arm	Use to update 253P4 Bell Puller
4	24161	Bit Holder	3/8 inch drive
5	281P4	Torx Bit	For removal and installation of control hood security screws
	282P4	Torx Bit	For removal and installation of pump and front panel attached screws
6	242P4	Spring Installer	Use to install brake spring
7	293P4	Drive Bell Seal Tool	For installation of 36425 Bell and Transmission Tube Seal

© Copyright, Alliance Laundry Systems LLC – DO NOT COPY or TRANSMIT

Special Tools (Drawing 2 of 2)

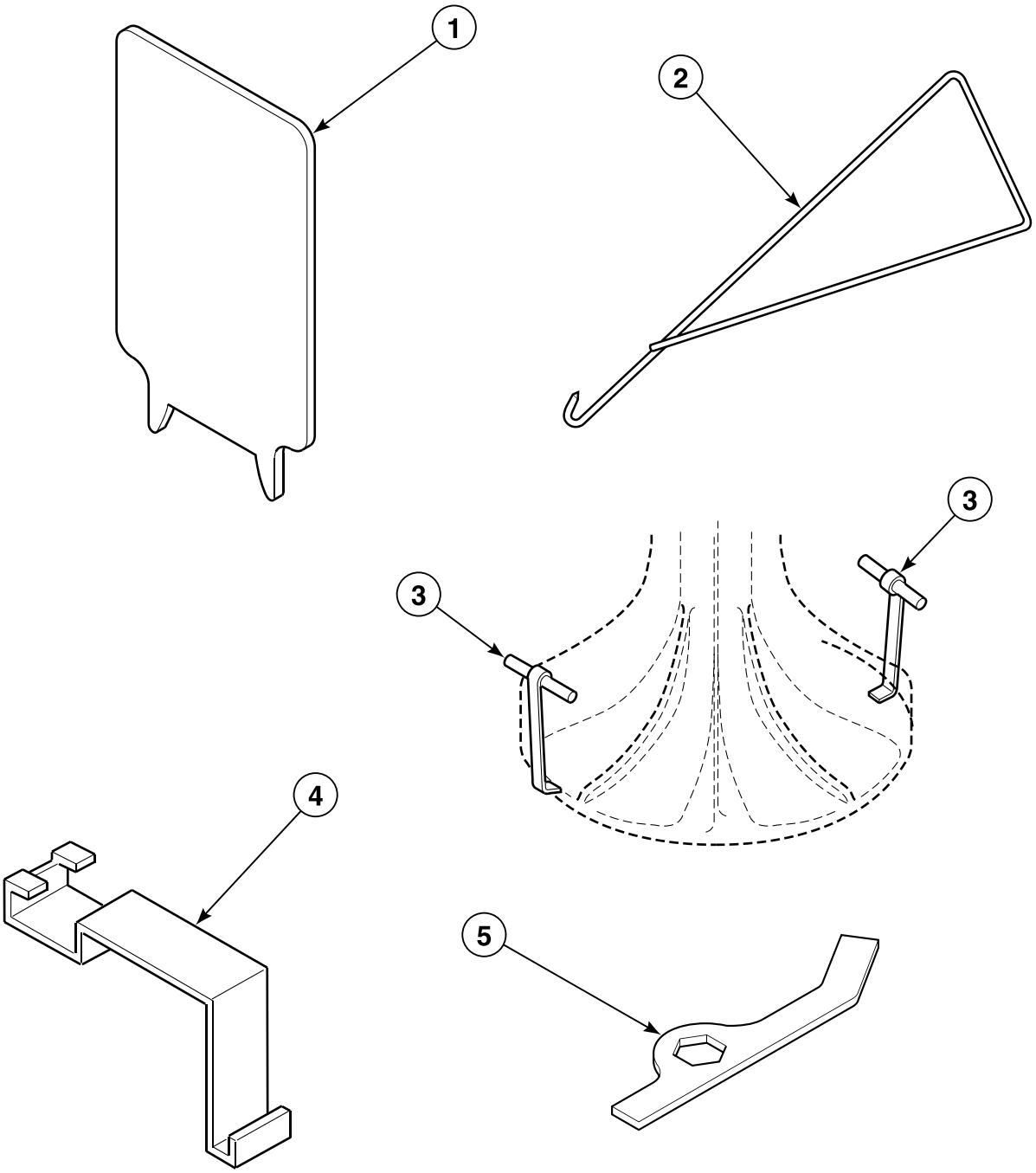

W137PZ3B_35383

© Copyright, Alliance Laundry Systems LLC – DO NOT COPY or TRANSMIT

Special Tools (Drawing 2 of 2)

REF	PART NO.	DESCRIPTION	COMMENTS
	725P3	Tool Kit	Includes items 2, 3, 5, 282P4 Torx Bit and 293P4 Drive Bell Seal Tool
1	272P4	Lid Switch Installation Tool	Use for installing lid switch for models using 33440 Switch Holder
2	321P4	Spring Hook Tool	Use for removal and installation of centering springs on outer tub
3	254P4P	Agitator Hook	Use to remove agitator from drive bell; Set of 2
4	273P4	Tub Cover Removal Tool	Use to remove 36025P Tub Cover Kit from outer tub and install 32857 Tub Cover Gasket in outer tub cover
5	306P4	Hex Wrench Tool	Use to remove hex locknut from washtub hub

© Copyright, Alliance Laundry Systems LLC – DO NOT COPY or TRANSMIT

Wire Harnesses and Wires

PART NO.	DESCRIPTION	COMMENTS
36278P	Base Wire Harness Assembly	
39811	Timer Wire Harness Assembly	Model EA2011*
34092P	Wire Harness Assembly	Timer; Models EA2020* and EA2021*
39806P	Timer Harness Assembly	Models EA2110*, EA2111*, EA2210* and JA0110*T
29281P	Timer Harness Assembly	Models EA2120*, EA2121*, EA2220* and EA2221*
N/A	Wire Harness Assembly	Timer; Model EA2311*
34175P	Timer Wire Harness Assembly	Models EA2520*, EA2521*, EA2620*, EA2621* and EA2721*
34239	Timer Wire Harness Assembly	Models EA2610* and EA2710*
33805P	Wire Harness Assembly	Hood; Models EA2020* and EA2021*
33758P	Wire Harness Assembly	Hood; Models EA2120*, EA2121*, EA2220*, EA2221*, EA2520*, EA2521* and EA2721*
N/A	Wire Harness Assembly	Hood; Models EA2610* and EA2710*
36262	Wire Harness Assembly	Hood; Models EA2620* and EA2621*
36093P	Wire Harness Assembly	Hood; Models EA2820*, EA2821*, EA2920* and EA2921*
N/A	Wire Harness Assembly	Hood; All other models
36094P	Meter Case Harness Assembly	Models EA2820*, EA2821*, EA2920* and EA2921*
45001	18 Gauge Wire	Black; Order wire by foot and terminals and connectors as required
45380	12 Gauge Wire	Orange; Order wire by foot and terminals and connectors as required

*** Add Letter To Designate Color. L - Almond W - White**

N/A = Part no longer available

NOTE: Individual wires are not available separately. Order complete harness, or order wire by the foot. When applying terminals to wires, it is recommended that the terminals be soldered to the wires.

© Copyright, Alliance Laundry Systems LLC – DO NOT COPY or TRANSMIT

Parts Index

A

Actuator
36164 11
Actuator Arm
33441 25
Actuator Support
36163 11
Agitator
33513 31
Agitator Drive Bell Puller
294P4 49
Agitator Hook
254P4P 51
Agitator Pinion
27003 41
Anti-Seize Compound
27604P 39

B

Backflow Preventer
34500 29
Balance Ring Assembly
34731P 39
Base Kit
34434P 43
Base Wire Harness Assembly
36278P 52
Bearing Housing Assembly
27182 39
35746 37
Bell and Transmission Tube Seal
36425 31
Bell Plug
36511 31
Belt
28808 27
Bit Holder
24161 49
Bolt
02505 ..... 5, 7, 9, 13
294P4B 49
29651 ..... 7, 9
Bracket
36036 43
36037 43
Brake Kit
38505P 37
Brake Pad Kit
548P3 37
Bumper
21685 23
Bumper Pad
36226 43
56128 43

C

Cable Clip
21036 33
Capacitor Kit
258P3 27
Circuit Board Support
34896 19
Clothes Guard
32990 31
Clutch Assembly
29503 ..... 7, 9
Coin Drop
39873P 13
Coin Funnel Kit
523P3 ..... 7, 9
Coin Slide Extension
501483 11
Connector
21091 47
Control and Bracket Assembly
33422P 17
Control Hood
37075L 15, 17, 19, 21
37075W 15, 17, 19, 21
Control Panel and Bracket Assembly
36521LP 15, 17, 19
36521WP 15, 17, 19
Control Panel Assembly
36097L 21
36097W 21
Control Panel Bumper
32648 ..... 15, 17, 19, 21
Control Panel Overlay
39096 21
Control, Shield and Tape Kit
38188P 21
Counter Kit
62113P 7

D

Director Bracket
36034 23
Disconnect Power Warning Label
505281 23
Drain Hose
28293 35
Drain Hose Elbow
35766 35
Drive Bell and Seal Kit
39508P 31
Drive Bell Puller Arm
294P4A 49
Drive Bell Seal Tool
293P4 49
Drive Pinion
36562P 41

N/A items do not appear in index.

© Copyright, Alliance Laundry Systems LLC – DO NOT COPY or TRANSMIT

E

Expansion Plug
200820 13

F

Female Flag Terminal
00120 47
Female Pin Terminal
00117 47
Female Spade Terminal
00112 47
00121 45
00223 47
Female Terminal
00188 ..... 45, 47
Fill Hose Kit
28330P 29
Flinger
27187 39
Front Panel Assembly
34656LP 43
34656WP 43
Front Panel Brace
35097 43

G

Gear and Stud Assembly
26577 41
Graphic Overlay
32460 15
32472 15
32479 17
34699 19
Grommet
29175 33
Grounding Clip
00161 47

H

Harness Strap
55881 47
Helix
27018 37
Hex Wrench Tool
306P4 51
Hinge Bushing
36474 23
Hinge Gasket
34338 23
Hold-Down Clip
35865 43
Hold-Down Lug Hinge
27103 43
Hood Back Panel
38267 ..... 15, 17, 19, 21
Hose Clamp
20211 35
20391 35
29210 29
36801 29
36802 35
Hose Coupler
25863 35
Hose Retainer Clip
39177 35
Hose Support
35487 35
Housing, 24 Position
32746 47
34123 47
Hub and Seal Kit
495P3 31

I

Idler Lever
31054 27
Idler Pulley
28800P 27
Idler Shaft
28802P 27
Idler Spring
37366 27
Indicator Light
32465 17
Input Shaft
34853P 41
Insulator
70210 47

L

Lead-In Cord
34458 47
39404 47
Leg and Stabilizer Assembly
34443 43
Leg Plate
27926 33
Leveling Leg
34319 43
Lid
201460WP 23
33845LP 23
33845WP 23
Lid and Carton Assembly
201460LP 23
Lid Hinge
36437 23
36438 23
Lid Plug
34153 23
Lid Switch Installation Tool
272P4 51
Light
32464 ..... 15, 19
32466 ..... 15, 19

N/A items do not appear in index.

© Copyright, Alliance Laundry Systems LLC – DO NOT COPY or TRANSMIT

801431 17

M

Magnet
501453 ..... 9, 13
Male Pin Terminal
00116 47
Meter Case and Funnel Kit
524P3L 7, 9
524P3W 7, 9
Meter Case Bracket Gasket
35526 ..... 7, 9, 13
Meter Case Gasket
26354 ..... 7, 9, 13
Meter Case Harness Assembly
36094P 52
Meter Case Kit
38542LP 13
38542WP 13
Meter Case Lockdown Bracket
35525 ..... 7, 9, 13
Meter Case Locking Bracket
30642 ..... 7, 9, 13
Meter Case Mounting Bracket Assembly
35867 43
Mixing Valve
34963P 29
Mixing Valve Mounting Bracket
39407 29
Mixing Valve Plug
34675 45
34676 45
Mixing Valve-to-Tub Cover Hose
38155 29
Motor Assembly
35485P 27
Motor Mount
34788 27
Motor Mount Post
34791 27
Motor Pulley
27104 27
Motor Shield
34754 27
Motor Switch
35632P 27

N

Nut
03673 ..... 17, 47
21899 43
23951 17
24205 ..... 15, 17, 19
27222 ..... 23, 39
28803 27
29220 31
29786 ..... 5, 7, 9, 13
29796 ..... 7, 9
30647 ..... 7, 9, 13
35423 27
36020 23
52566 ..... 5, 15, 17, 19, 21, 27

O

Opto Coupler
200824P 13
O-Ring
36472 31
Outer Tub Kit
34439P 33
Output Shaft
36570P 41

P

Panel Locator
28102 43
56079 43
Pivot Dome
34470 37
Plastic Boot
36165 11
Plug, 1 Circuit
26302 47
Plug, 10 Circuit
34677 45
Plug, 6 Circuit
23041 47
Plug, 9 Circuit
23033 47
Pressure Bulb
30907 33
Pressure Switch
35889P 15, 17, 19, 21
Pulley Assembly
34923 37
Pump Assembly
31969 35
Pump Belt
27155 27
Pump Mounting Bracket
35162 35
Pump-to-Drain Elbow Hose
27161 35
Pushbutton Switch
34536 9
Push-On Clip
34762 19
Push-to-Start Sticker
53738 5

R

Rack
201664 41
Receptacle, 1 Circuit
26301 47
Receptacle, 6 Circuit
26708 47

N/A items do not appear in index.

© Copyright, Alliance Laundry Systems LLC – DO NOT COPY or TRANSMIT

Receptacle, 9 Circuit
26163 47
Reduction Gear
29161P 41
Reed Switch
34599 ..... 9, 13
Rejector Faceplate
201191 13
Retaining Ring
23748 27
27197 41
Ring Terminal
00110 47
00113 47
Roll Pin
10416 27
Rubber Foot
34318 43

S

Screw
M400057 39
02916 ..... 5, 15, 17, 19, 21
03814 17
03950 11
201773 41
20267 ..... 17, 47
21720 ..... 7, 9
23008 23
23222 ..... 15, 17, 19, 21
23962 ..... 5, 15, 17, 19, 21, 25, 29, 43
27196 43
27202 31
27220 37
27229 27
27328 5
29273 41
31260 9
32814 41
33562 29
34337 23
35148 43
35369 ..... 33, 37
35527 43
35528 ..... 15, 17, 19, 21
36048 ..... 7, 9, 13
36166 11
36510 25
36639 27
39432 31
39733 43
500226 ..... 15, 17, 19, 21
501524 21
502431 ..... 7, 9
503661 ..... 27, 35
503673 ..... 7, 9, 13, 23
51778 5
51780 43
52909 ..... 23, 35
80399 5
Service Cabinet Kit
38612LP 43
38612WP 43
Service Door Assembly
35798LP 7, 9, 13
35798WP 7, 9, 13
Silicone Grease
26594P 37
Siphon Break Kit
562P3 35
Slide
26493 41
Snap Switch
33527 25
Snubber Pad Assembly
36108 43
Spline Insert
29728 31
Spring
33435 37
33443 25
Spring Clip
28849 27
Spring Hook Tool
321P4 51
Spring Installer
242P4 49
Strain Relief
38384 23
Support Barrel
56534 23
Switch
27761 ..... 15, 17, 19
27762 ..... 15, 19
33445 25
504570 13
Switch Holder Clip
33433 25
Switch Holder Kit
36497P 25
Switch Knob
39897 ..... 15, 17, 19

T

Terminal Adapter
29673 47
Terminal Extractor Tool
283P4 45
Timer
28716P 5
31111P 7
34601P 7
34602P 7, 9
Timer Bracket
35249 ..... 7, 9, 11
Timer Case Assembly
37733W 5
Timer Harness Assembly
29281P 52
39806P 52
Timer Knob Assembly
26256 5
Timer Plate
31864W 5
Timer Wire Harness Assembly
34175P 52
34239 52

N/A items do not appear in index.

© Copyright, Alliance Laundry Systems LLC – DO NOT COPY or TRANSMIT

39811 52
Tool Kit
725P3 51
Top Assembly
36120LP 23
36120WP 23
36122LP 23
36122WP 23
36273LP 23
36273WP 23
Torx Bit
281P4 49
282P4 49
Transmission Assembly
34526P 39
Transmission Case Assembly
33223P 41
Transmission Cover Assembly
38290P 41
Transmission Oil
27243P 41
Transmission Sealant
37577P 41
Transmit Light
34701 19
Tub Assembly
39252P 31
39387P 31
Tub Cover Gasket
32857 33
Tub Cover Kit
36025P 33
Tub Cover Removal Tool
273P4 51
Tub Spring
35947 33
Tubing
39124 33
39125 33
Tub-to-Pump Hose
35754 35

U

Ultra Pod Terminal
00359 47
Unbalance Light
32463 ..... 15, 19
Unbalanced Load Lever
33442 25
Upper or Lower Bearing
28944RP 37

W

Warning Label
500049 33
Washer
M400017 ..... 5, 15, 17, 19, 21
02431 ..... 5, 15, 17, 19, 21
03815 ..... 17, 47
20290 29
21456 41
21734 5
23225 5
26509 ..... 37, 41
27015 37
28094 31
29260 41
29443 27
30627 5
35092 41
35535 37
35774 ..... 7, 9, 13, 23
35917 ..... 7, 9, 13, 23
52549 27
81392 27
91176 ..... 15, 17, 19
Washtub Gasket
39122 31
Wire Clip
36274 47
504034 47
51291 47
Wire Harness Assembly
33758P 52
33805P 52
34092P 52
36093P 52
36262 52
Wire, 12 Gauge
45380 52
Wire, 18 Gauge
45001 52

N/A items do not appear in index.

© Copyright, Alliance Laundry Systems LLC – DO NOT COPY or TRANSMIT

Notes

© Copyright, Alliance Laundry Systems LLC – DO NOT COPY or TRANSMIT